Inductive sensing using PSOC™ Automotive 4700 Plus

About this document

Scope and purpose

This application note serves as a design guide to implement and tune inductive sensing oscillator method with PSOC™ Automotive 4700S Plus devices. The inductive sense feature of PSOC™ 4 offers high sensitivity, an excellent signal-to-noise ratio (SNR), higher operating frequency (≤ 12 MHz), and up to 16-bit resolution for metal over touch buttons and metal target proximity detection.

The PSOC™ Automotive 4700S Plus product family is the industry's first microcontroller with an oscillator-based inductive sensing and capacitive sensing technology in a single chip. The inductive sensing technology enables sensing of metal objects and industry's leading capacitive sensing (CAPSENSE™) technology enables sensing of non-metallic objects.

Intended audience

This document is primarily intended for engineers who need to become familiar with the inductive sense principles of PSOC™ 4 MCU device.

Table of contents

About this document . . . 1

Table of contents . . . 2

1 Introduction . . . 5

1.1 Overview . . . 5

1.2 Typical applications for inductive sensing . . . 5

1.3 Inductive sense features . . . 5

1.4 PSOC™ Automotive 4700S Plus MCU features . . . 5

1.5 Inductive sense design flow . . . 6

2 Inductive sensing technology . . . 9

2.1 Inductive sense fundamentals . . . 9

2.2 Inductive touch sensing method . . . 10

2.3 PSOC™ internal hardware resources . . . 12

2.4 Inductive sensing applications . . . 14

2.4.1 Metal over touch (MoT) buttons . . . 14

2.4.2 Inductive and capacitive touch buttons . . . 15

2.4.3 Rotary encode system . . . 16

2.4.4 Absolute angle rotary encode system . . . 17

2.4.5 Flow meter using inductive sense . . . 17

2.4.6 Linear encoder using inductive sense . . . 18

2.4.7 Metal proximity detection using inductive sense . . . 18

3 Inductive sense hardware implementation . . . 19

3.1 Hardware parameters . . . 19

3.1.1 Oscillator frequency . . . 19

3.1.2 Scan window . . . 20

3.1.3 Raw counts . . . 20

3.1.4 Equivalent impedance of the circuit (Rp) . . . 21

3.1.5 Series resistor (RL) . . . 21

3.1.6 Inductance of a coil (L) . . . 21

3.1.7 Design limits for inductive sensing applications . . . 22

3.2 Hardware design flow . . . 23

3.3 Sensor design . . . 25

3.4 Sensor shapes . . . 27

3.5 Schematics guidelines . . . 29

3.5.1 PSOC™ pin selection for inductive sensor functionality . . . 29

3.5.2 Schematics for reference . . . 30

3.5.3 Design external components (C, RL, Clock) . . . 30

3.5.4 Material's conductivity and relative permeability . . . 31

3.6 Layout guidelines . . . 32

Table of contents

3.6.1 Generating coil footprint . . . 34
3.6.1.1 Inductive coils GUI tool: Coil's input parameters range . . . 37
3.7 Performance analysis of inductive sense methodology . . . 37
3.7.1 SNR vs. target distance . . . 38
3.7.2 Distance delta (metal target displacement) for SNR = 5 . . . 38
3.7.3 Raw counts vs. target distance . . . 39
3.7.4 Noiseless precession . . . 39
3.7.5 Sensitivity . . . 39
3.7.6 Noise floor (%) . . . 40
3.7.7 Effective number of bits (ENOB) . . . 40
3.7.8 Scan time . . . 41
3.7.9 Detection range . . . 41

4 Firmware implementation . . . 42
4.1 Inductive sense library . . . 42
4.1.1 Application Program Interface (API) . . . 42
4.1.2 Variables . . . 42
4.1.3 Tuning parameters . . . 43
4.2 Inductive sense configuration . . . 43
4.2.1 Smart I/O configuration . . . 43
4.2.2 TCPWM trigger terminal . . . 45
4.2.3 Unbounded pads in 40-QFN . . . 46
4.3 Firmware configurations . . . 47
4.3.1 Smart I/O block . . . 47
4.3.2 LC oscillator . . . 49
4.3.3 Counter . . . 49
4.3.4 Timer . . . 50
4.4 Firmware flow . . . 51
4.5 Sequential scanning . . . 53
4.6 Parallel scanning . . . 53

5 Hybrid inductive and capacitive sensing on same sensor . . . 55
5.1 CAPSENSE™ scan mode . . . 56
5.2 Inductive scan mode . . . 57

6 CY8CKIT-4700S Plus EVK – Inductive sense evaluation kit . . . 59
6.1 EVK features . . . 59
6.2 Block diagram . . . 60
6.3 Getting started with EVK . . . 61
6.3.1 Power up the lite kit . . . 61
6.3.2 Hardware and tool setup . . . 61
6.3.3 Software checks . . . 62
6.3.4 PSOC™ 4700S Plus EVK user guide . . . 63
6.4 Programming and debugging . . . 63

Table of contents

6.4.1 Program and debug using ModusToolbox™ 63

References 67

Revision history 68

Trademarks 69

Disclaimer 70

1 Introduction

1.1 Overview

Inductive sensors can detect the presence of metal objects and their proximity down to sub-millimeter precision. This makes possible to detect even the smallest deflection of a metal overlay stacked up over a sensing coil. Hence, inductive sensing enables force detection for HMI applications, providing a more robust, reliable, and cheaper alternative to mechanical buttons.

Furthermore, inductive sensing may be combined with capacitive sensing (CAPSENSE™ technology) to perform hybrid touch and force sensing.

This design guide focuses on the inductive sense feature in the PSOC™ 4700S Plus family of devices that are true programmable embedded system-on-chip, integrating configurable analog and digital peripheral functions, memory, and a microcontroller on a single chip. These devices are highly flexible and can implement many functions such as ADC, DAC, and CAPSENSE™ in addition to inductive sense, which accelerates time-to-market, integrates critical system functions, and reduces the overall system cost.

This guide assumes that you are familiar with developing applications for PSOC™ 4 MCU using the ModusToolbox™ IDE. For further information, see AN79953 - Getting started with PSOC™ 4 and ModusToolbox™ IDE quick start guide.

This design guide provides an understanding on:

- Inductive sense technology in PSOC™ 4700S Plus device
- Design and development tools available for PSOC™ 4 MCU inductive sense
- PSOC™ MCU inductive sense PCB layout guidelines
- Performance tuning of PSOC™ 4 MCU inductive sense
- Applications using inductive sensing and CAPSENSE™ (Hybrid sensing) features

1.2 Typical applications for inductive sensing

- Proximity detection
- Buttons (ON/OFF buttons and keypads)
- Linear and rotary encoders
- Angle position
- Control knobs
- Spring compression detection

1.3 Inductive sense features

Inductive sense in the PSOC™ 4700S Plus MCU has the following features:

- Supports operating frequencies from 1 MHz to 12 MHz
- Higher operating frequency reduces sensor size and scan time
- No temperature drift
- Higher sensitivity (very high SNR) and low noise
- Higher sensing distance
- Sequential and parallel scanning modes

1.4 PSOC™ Automotive 4700S Plus MCU features

The Automotive PSOC™ 4 MCU is a scalable and reconfigurable platform architecture for a family of programmable embedded system controllers with an Arm® Cortex®-M0+ CPU while being AEC-Q100 compliant. It

combines programmable and reconfigurable analog and digital blocks with flexible automatic routing. The PSOC™ Automotive 4700S Plus product family, based on this platform, is the industry's first microcontroller with oscillator based inductive sensing and capacitive sensing technology in a single chip. The inductive sensing technology enables sensing of metal objects and industry's leading capacitive sensing (CAPSENSE™) technology enables HMI touch sensing.

Features:

- **Automotive Electronics Council (AEC) AEC-Q100 qualified**
- 32-bit MCU subsystem
  - 48 MHz Arm® Cortex®-M0+ CPU
  - Up to 128 KB of flash with read accelerator
  - Up to 8 KB of SRAM
  - 8-channel DMA engine
- **Programmable analog**
  - Two opamps with reconfigurable high-drive external and high-bandwidth internal drive and comparator modes and ADC input buffering capability. Opamps can operate in deep sleep low-power mode
  - 12-bit 1-Msps SAR ADC with differential and single-ended modes, and channel sequencer with signal averaging
  - Single-slope 10-bit ADC function provided by a capacitance sensing block
  - Two current DACs (IDACs) for general-purpose or capacitive sensing applications on any pin
  - Two low-power comparators that operate in deep sleep low-power mode
- **Programmable digital**
  - Three smart IO ports (19 smart I/O pins) allowing boolean operations to be performed on port inputs and outputs
- Low-power 1.71 V to 5.5 V operation
  - Deep sleep mode with operational analog and 2.5 A digital system current
- **Oscillator-based inductive sensing**
  - Infineon inductive sensing provides superior noise immunity
  - Can reliably detect metal deflection under 190 nm
  - Inductive sense software component automatically calibrates the solution to compensate for the manufacturing variations
  - Supports upto four sensors
- **Capacitive sensing**
  - Infineon CAPSENSE™ sigma-delta (CSD) provides best-in-class signal-to-noise ratio (SNR) (> 5:1) and water tolerance
  - Infineon-supplied software component makes capacitive sensing design easy
  - Automatic hardware tuning (SmartSense)
- **LCD drive capability**
  - LCD segment drive capability on GPIOs
- **Serial communication**
  - Five independent run-time reconfigurable Serial Communication Blocks (SCBs) with re-configurable I2C, SPI, UART functionality, or LIN slave functionality

1.5 Inductive sense design flow

Figure 1 illustrates the production design cycle with Inductive sensing.

1 Introduction

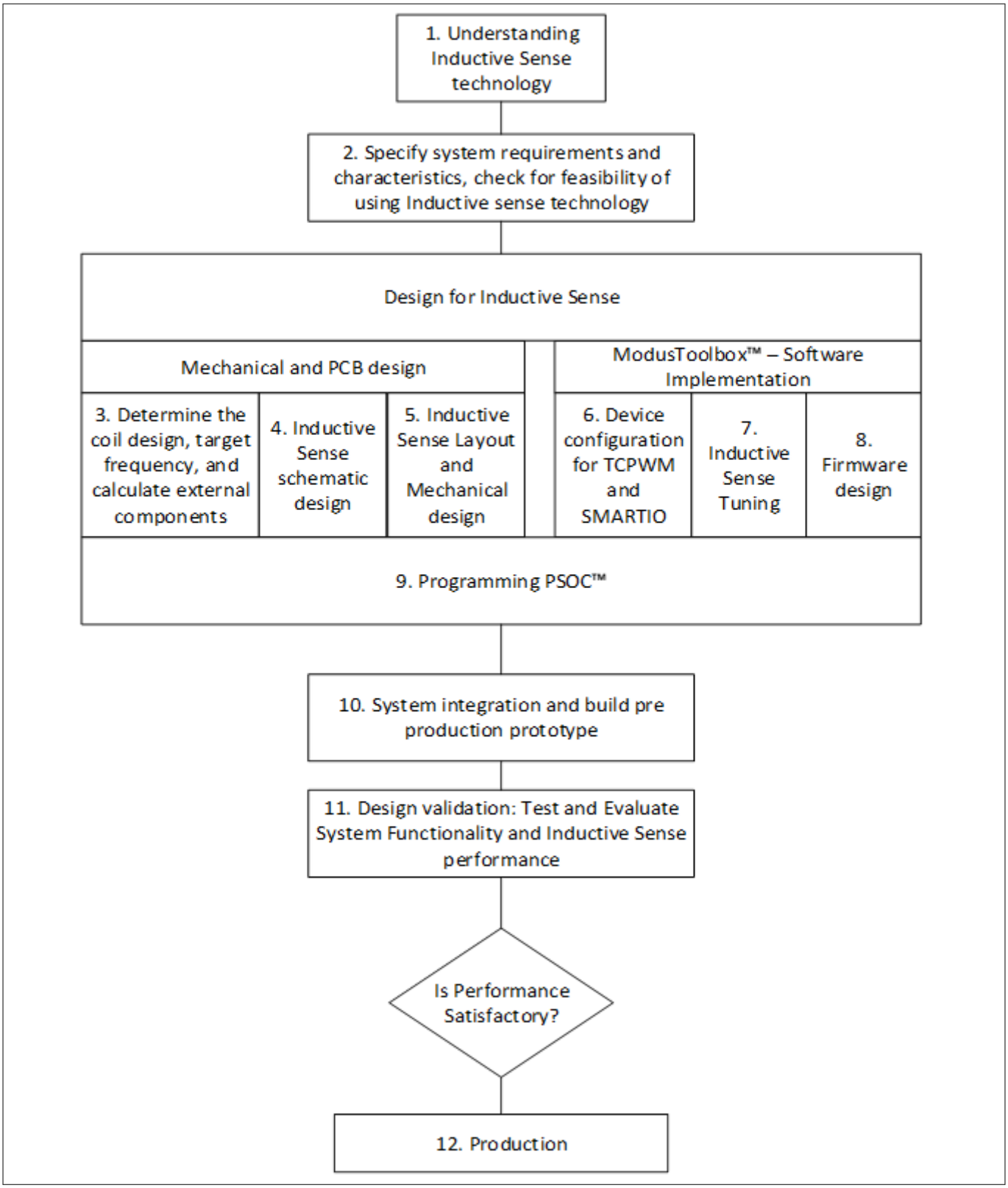

Figure 1 Inductive sense design flow

1 Introduction

Table 1 Supporting documentation

Steps in flowchart	Supporting documentation	
	Name	**Chapter**
• Understanding inductive sense technology	Inductive sense design guide (this document)	Chapter 2
• Specify requirements and feasibility study	PSOC™ 4 datasheet AN79953 – Getting started with PSOC™ 4	–
• Determine the coil design, target frequency, and calculate external components	Inductive sense design guide (this document)	Chapter 3
• Inductive sense schematic design	Inductive sense design guide (this document)	Chapter 3
• Inductive sense layout and mechanical design	Inductive sense design guide (this document)	Chapter 3
• Device configuration for TCPWM and smart I/O	Inductive sense design guide (this document)	Chapter 4
• Inductive sense tuning	Inductive sense design guide (this document)	Chapter 4
• Firmware design	Inductive sense design guide (this document)	Chapter 4
• Programming PSOC™	Modus Toolbox™ user guide for in-IDE programming PSOC™ Programmer home page and MiniProg3 guide for standalone programming	–
• System integration and build preproduction prototype	–	–
• Design validation: Test and evaluate system functionality and inductive sense performance	Inductive sense design guide (this document)	Chapter 5
• Production	–	–

2 Inductive sensing technology

Inductive sensing touch technology detects inductance change of a coil caused by the presence or the displacement of an existing metal target. Such displacement may be, for instance, caused by a human finger press over a metallic overlay or by an approaching metal target.

2.1 Inductive sense fundamentals

Inductive sensing works on the principle of electromagnetic coupling between a sensor coil and a metal target. A typical inductive sensor consists of a copper coil of a proper shape and size etched on the surface of a PCB.

The two ends of the coil will be connected to the PSOC™ device smart I/O pins with the required external components to run the oscillator at the calculated operating frequency to induce the corresponding magnetic field around the sensor coil as shown in the below figure.

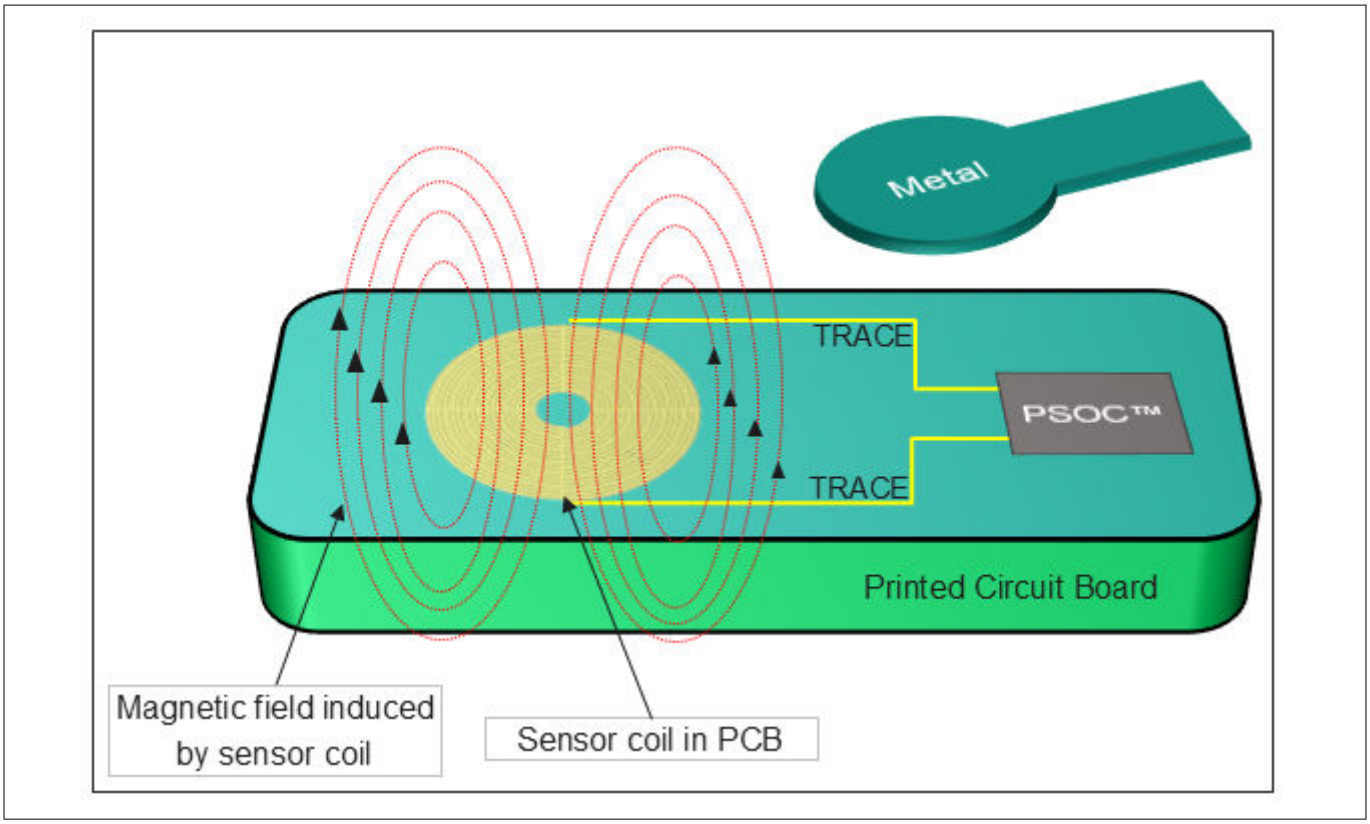

Figure 2 Inductive coil etched on PCB

The above figure shows the sensor coil (inductance) and PSOC™ connected to form an oscillator circuit, which generates magnetic fields at a certain frequency around the sensor coil. The frequency of magnetic fields around the coil is determined by the frequency of the AC current passing through the coil.

$$f = \frac{\omega}{2\pi} \quad (1)$$

Where,

- **f** is the frequency of the magnetic field in Hz
- **ω** is the angular frequency of the AC current (in radians per second)

When an external metal target comes close to the sensor coil as shown in the below figure, the magnetic fields generated by the sensor coil gets transferred to the metal target, which in turn generates an eddy current in the sensor coil. The eddy current flowing in the metal target induces reverse electromagnetic field on the sensor

coil, which results in a reduction of the effective inductance of the sensor coil and changes the angular frequency of the AC current thereby changing the frequency of magnetic fields to detect the touch operation.

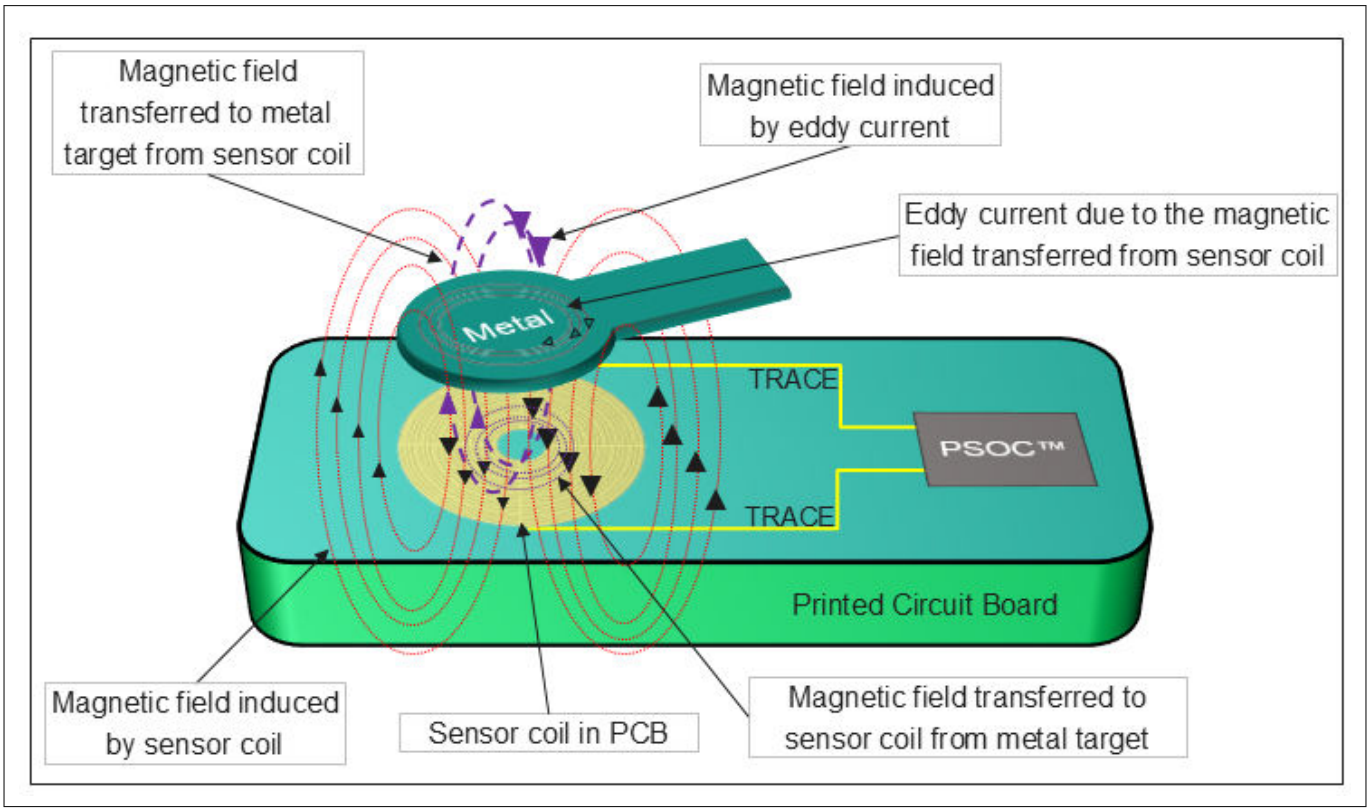

Figure 3 Magnetic fields disrupted by the metal target near inductive sensor coil

2.2 Inductive touch sensing method

The core principle behind inductive touch sensing is the inductance between a coil (sensor) and a conductive object. Oscillator circuits are formed to generate an alternating magnetic field around the sensing coil. When a conductive object approaches the sensor, the inductance of the coil changes due to eddy currents induced in the object. The oscillation frequency or amplitude of the signal shifts, which is processed to determine touch or proximity.

Oscillator-based inductive sense technology requires a coil etched from the PCB copper traces, which are connected to two capacitors (C1 and C2) and a resistor (RL) as shown in the Figure 4. The coil's parasitic resistance is shown as "Rs" in Figure 4. The combination of a coil, two capacitors, and a NOT gate (SmartIO), forms an oscillator that generates a magnetic field with a resonant oscillation frequency, which is measured by an internal counter.

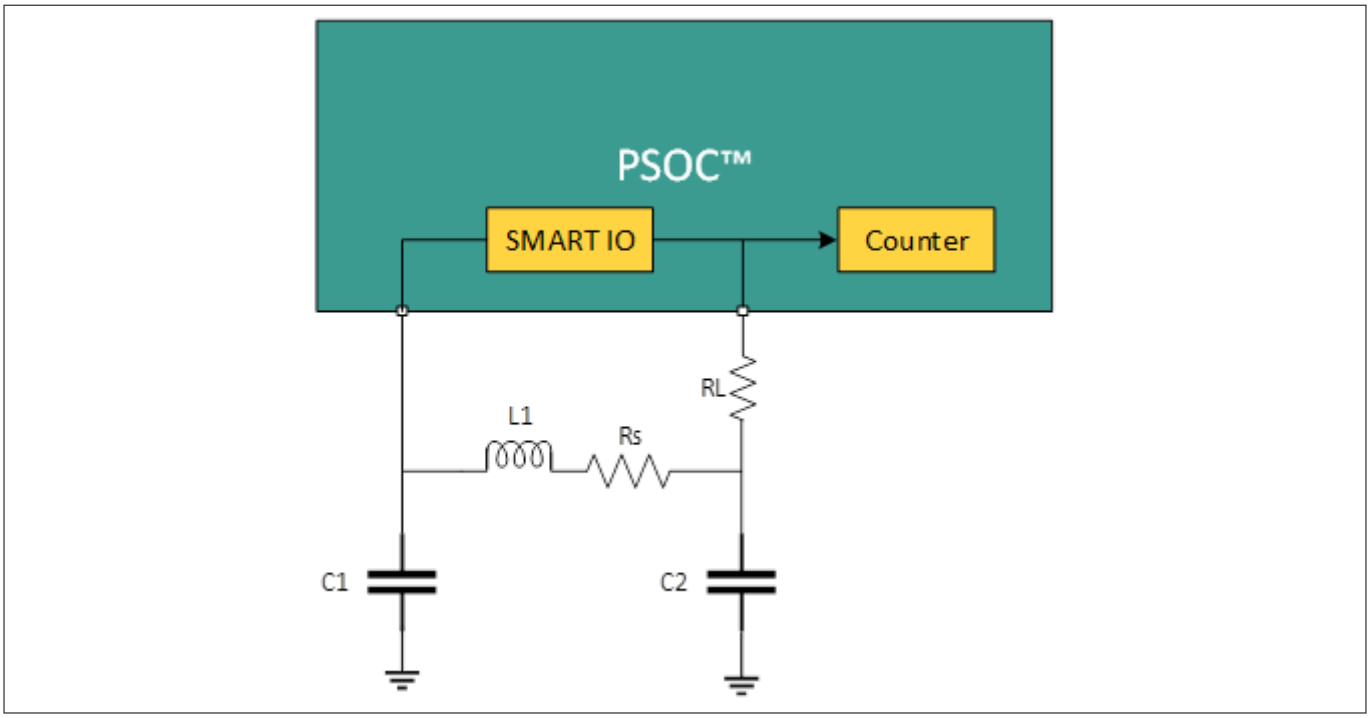

Figure 4 Oscillator-based inductive sense architecture

The inductance L is formed with coil etched from the PCB copper traces as shown in Figure 5, the nominal inductance without a metal target or metal displacement is called parasitic inductance Lp. The frequency generated from the Lp, C1, and C2 is no touch oscillation frequency whose edges will be counted by the counter.

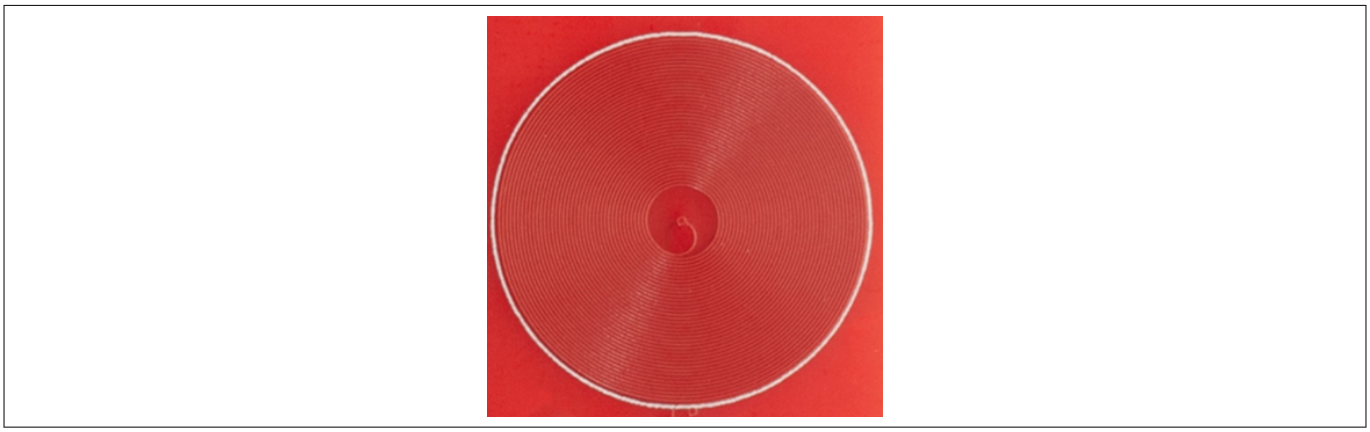

Figure 5 Coil etched from the PCB copper traces

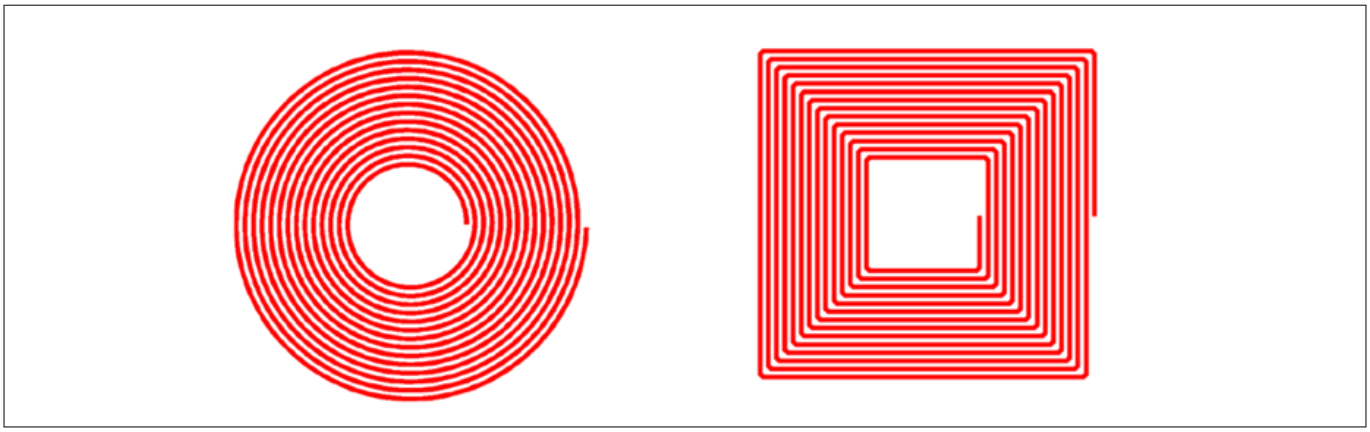

Figure 6 Coil circular and rectangular pattern

The parasitic inductance of a coil changes when a conductive metal target enters the vicinity of its magnetic field. This interaction alters the overall inductance of the coil, leading to a shift in the oscillator's frequency response. As a result, the change in oscillator frequency affects the counter measurements, as the timing of the oscillator's signal edges is directly impacted. Figure 7 shows the frequency response vs. inductance of the coil.

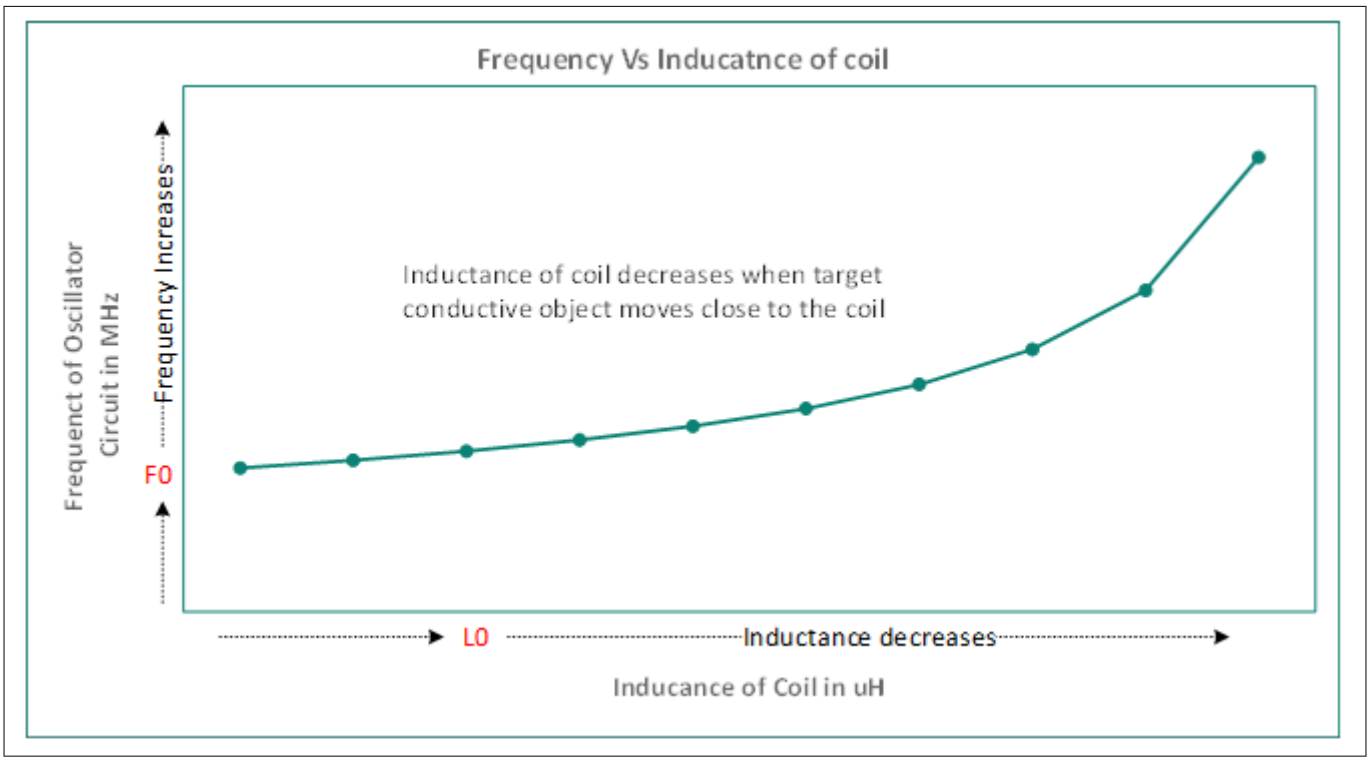

Figure 7 Frequency vs. inductance of coil

2.3 PSOC™ internal hardware resources

The oscillator-based inductive sense technology uses some of the internal blocks of PSOC™ device for its operation such as smart I/O block, counter block, and timer block as shown in Figure 8.

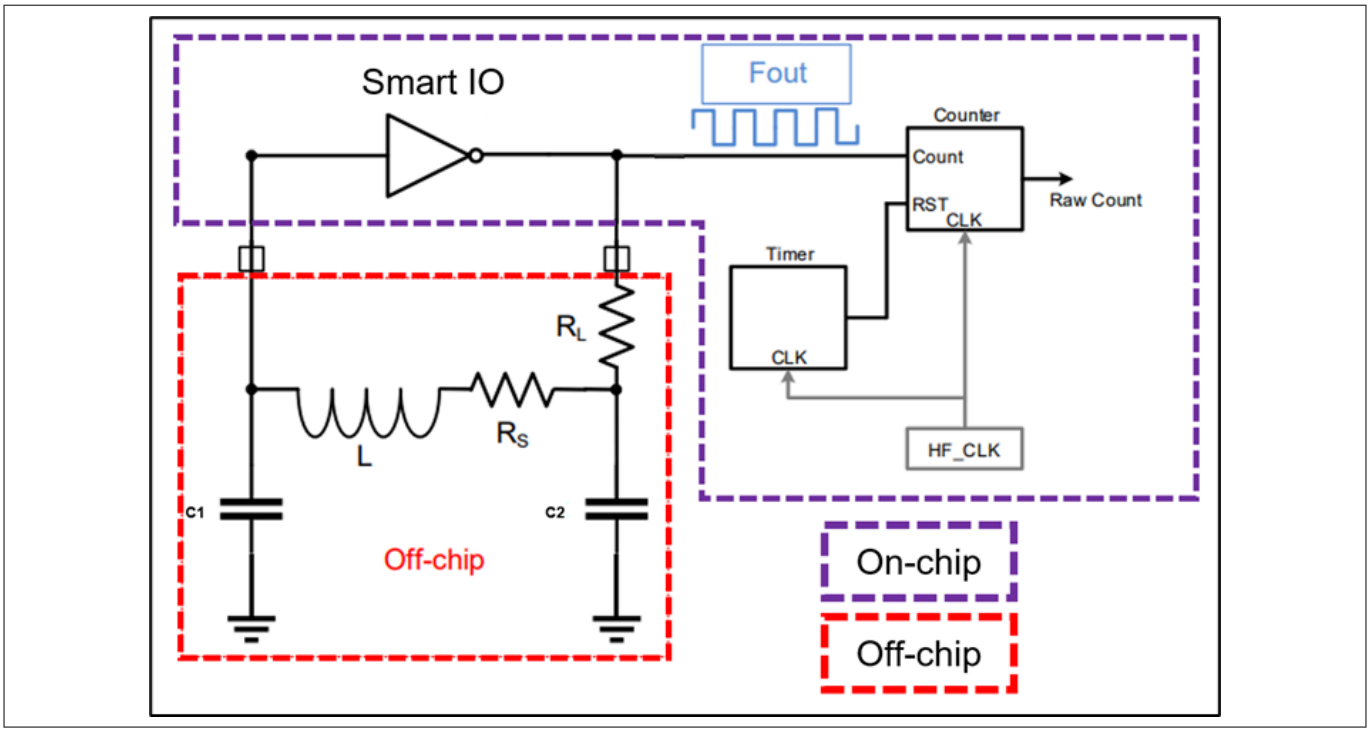

Figure 8 Oscillator-based inductive sense off-chip and on-chip components

A pierce oscillator is created using a combination of a smart I/O (NOT gate), an inductor (implemented as an etched coil from PCB traces), and capacitors (C1 and C2). The output of this oscillator is connected to the internal TCPWM counter block of the PSOC™ device. This counter block translates the oscillator's frequency into raw counts. Additionally, a separate TCPWM timer block is used to monitor the scan duration, ensuring precise time tracking.

Internal resources:

- **Smart I/O block:**

Each inductive sensor uses two smart I/O pins configured as NOT gate for its operation, details on smart I/O configuration is described further in this document.

- **Counter block:**

The counter block is used in oscillator-based inductive sense to generate raw counts (output counts) that are proportional to the inductive sense coil's frequency. The oscillator-based Inductive sense operates in such a way that the Inductance of the coil changes when an external metal object couples with the coil's magnetic field. The change in inductance, in turn, changes the frequency of the oscillator circuit, which is fed to the count signal of the counter to generate proportional counts.

- **Timer block:**

The timer block is used to generate scan window expiration interrupts after which the firmware reads the counter's accumulated counts to estimate the change in the coil's inductance value. The scan window plays a crucial role in inductive sensing technology, which defines the amount of time required for scanning and identifying the touch status.

- **HF clock:**

PSOC™ supports multiple peripherals clock dividers to derive different clock frequencies for individual peripheral operations; each sensor in oscillator-based inductive sense technology uses one of these peripheral clock dividers for counter and timer operations.

2.4 Inductive sensing applications

2.4.1 Metal over touch (MoT) buttons

The Metal over Touch (MoT) button is designed to detect the deflection of a metal overlay when touched. In this sensor type, a metal overlay is placed above the sensor with a thin spacer or etched surfaces separating them, as depicted in Figure 9. Upon the application of force during the touch, the metal overlay bends causing the magnetic fields to change, which is detected by the inductive sensor. Figure 10 displays a metal overlay's front and back sides, featuring etched cavities. The effectiveness of touch sensitivity is influenced by several parameters:

- Amount of metal deflection
- Sensor dimensions
- Spacer thickness or depth of etched cavity
- Applied force

***Note**: The amount of metal deflection for the applied force depends on metal material, thickness, and flexible rigidity.*

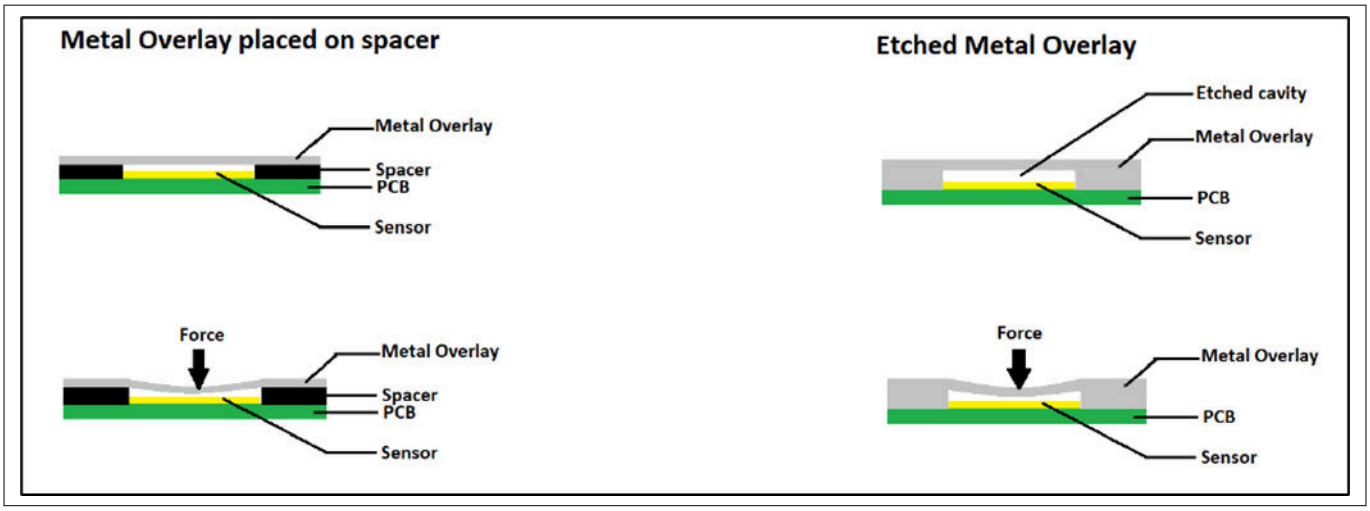

Figure 9 Metal over Touch buttons arrangement



Figure 10 Example metal overlay

In some applications, it is desired to have a non-conductive overlay. In such cases, a thin layer of metal can be affixed on the inner surface of the non-conductive layer, and can be separated from the sensor coil using spacers as shown in Figure 12.

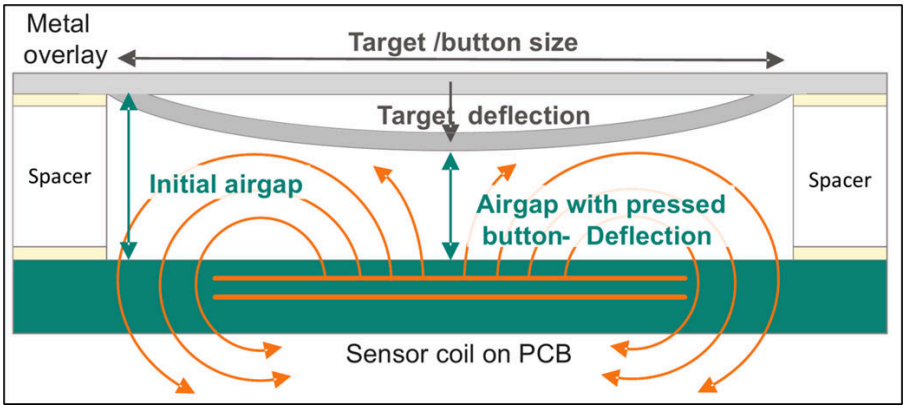

Figure 11 Metal over touch button

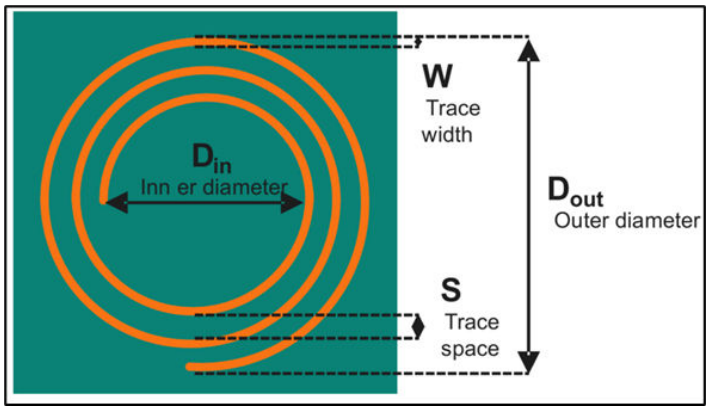

Figure 12 Touch over non-conductive overlay

The dashed lines in Figure 12 shows deflection in non-conductive layer and metal layer.

2.4.2 Inductive and capacitive touch buttons

Inductive sensors are used to detect human touch by sensing the deflection caused when force is applied to the sensor. For the touch to be recognized, a minimum amount of force is necessary to create deflection; without this force, the sensor cannot detect the touch (this can be termed as hard touch). On the other hand, CAPSENSE™ technology can detect a finger touch even in the absence of applied force (soft touch). Furthermore, the PSOC™ supports both inductive sense and capacitive sense technologies on the single device can be used to integrate both inductive sensing and capacitive sensing within a single touch button. This combination ensures comprehensive touch sensitivity to differentiate soft and hard touch, providing a versatile solution for various applications.

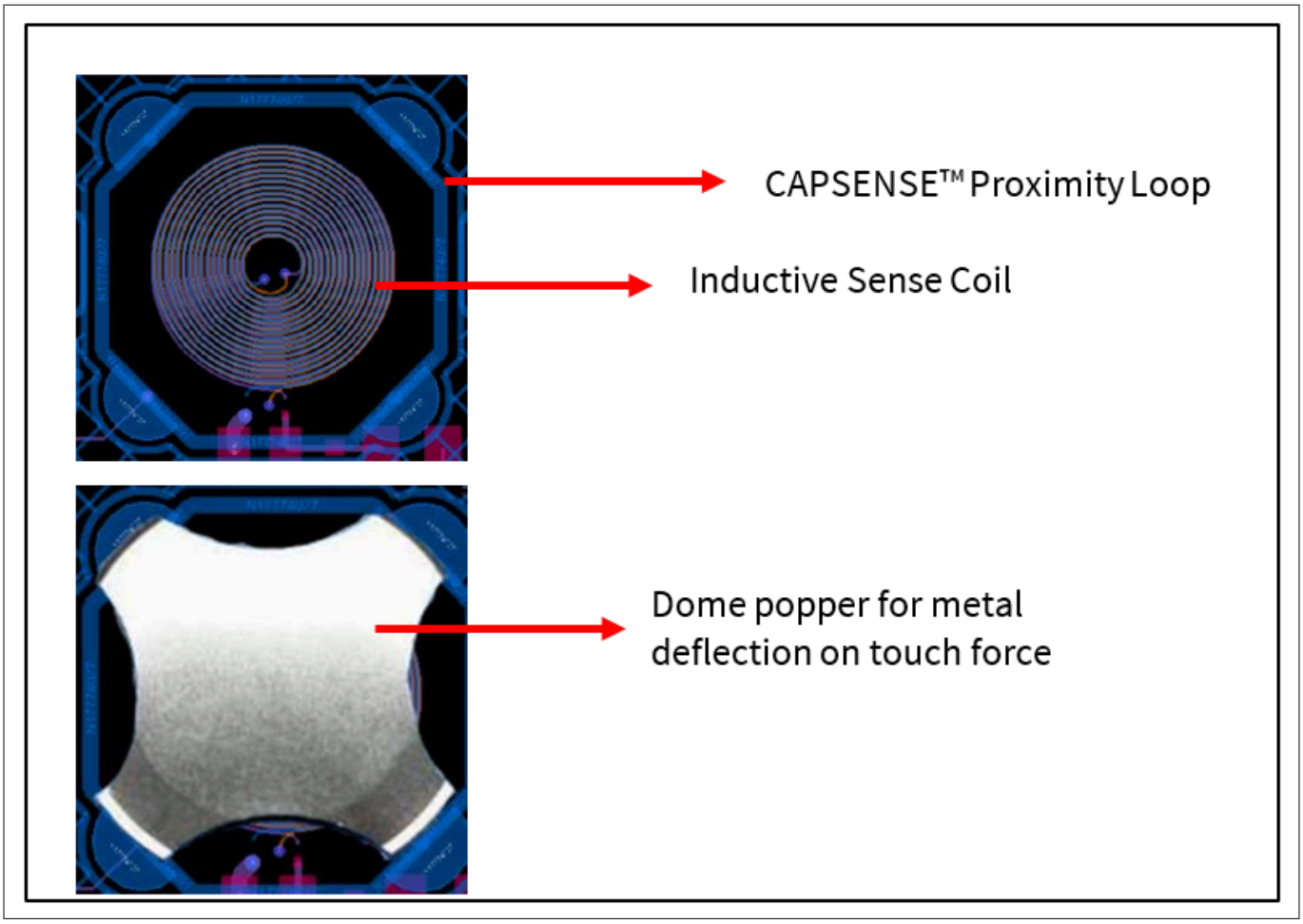

Figure 13 Hybrid sense with CAPSENSE™ and inductive sense

2.4.3 Rotary encode system

Rotary encode is another use case for inductive sensing. The construction of a rotary encoder involves two sensor coils and N number of targets placed on the rotating platform as shown in Figure 14. To ensure a uniform separation between the base and rotating platforms of the rotary encoder, a bush can be added along the shaft in the center of the rotary encoder.

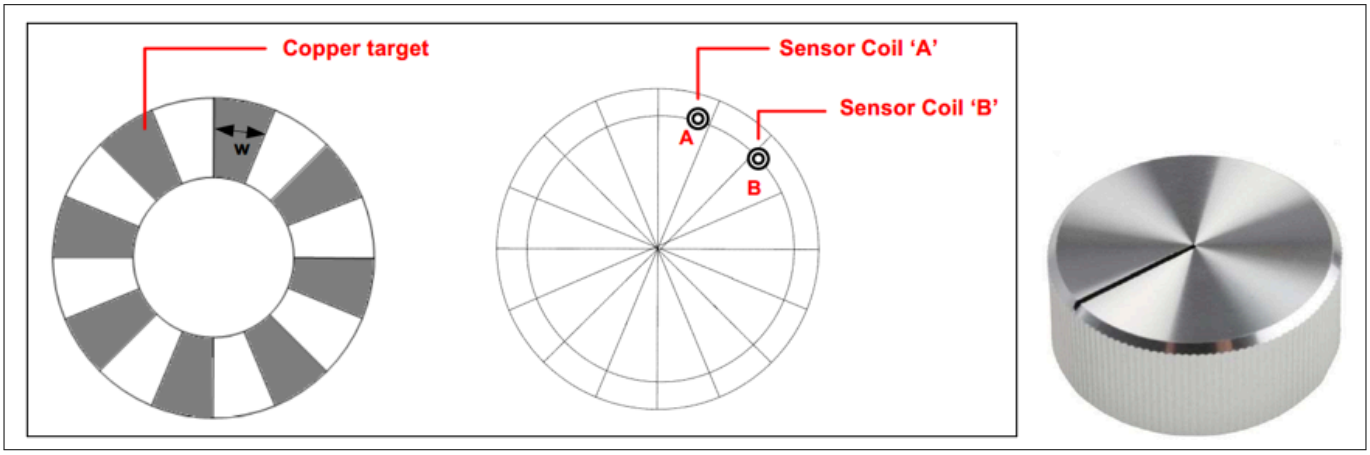

Figure 14 Inductive rotary encoder

2.4.4 Absolute angle rotary encode system

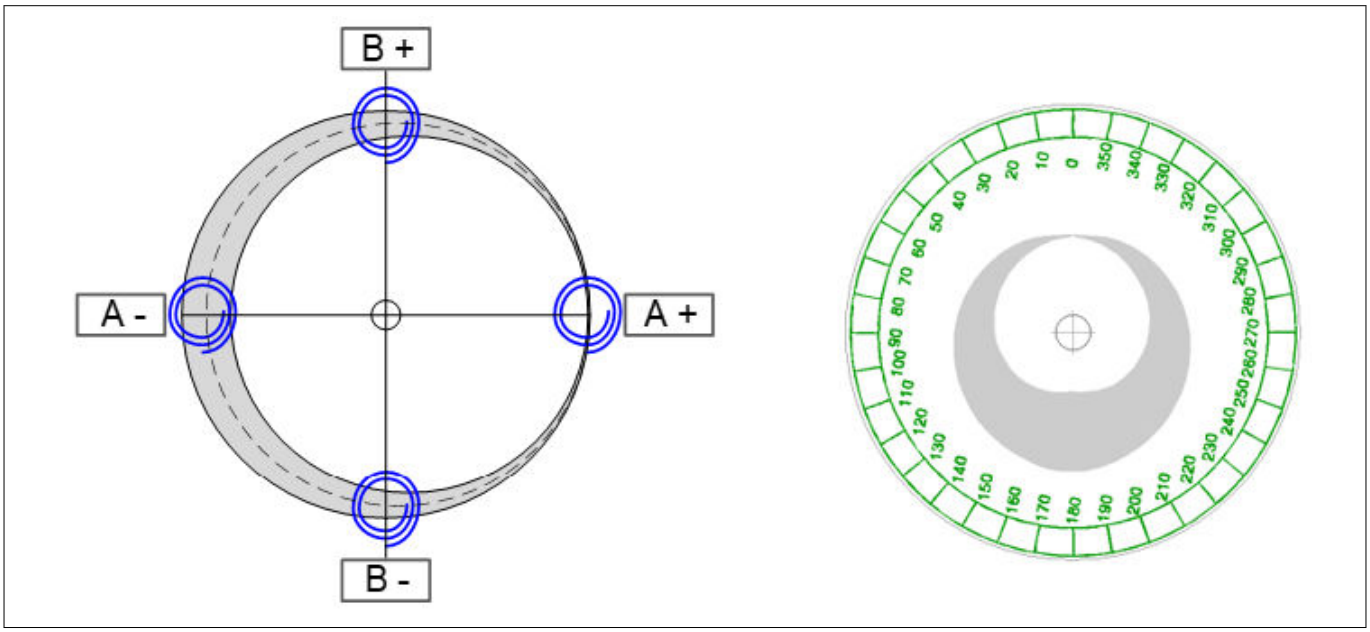

Figure 15 Absolute angle rotary encoder

The absolute angle rotary encoder measures the angular position of a rotating shaft using inductive sensing. It features a stator with coils and a rotor with conductive targets, creating electromagnetic fields that change with rotation. The encoder detects these changes to provide precise, absolute position data without requiring a reference point. Labeled points (e.g., A+, A-, B+, B-) in the image represent sensor or target positions, while the circular scale on the right indicates degree measurements, aiding in angle determination. This design ensures high accuracy, reliability, and resistance to environmental factors like dust or vibration.

2.4.5 Flow meter using inductive sense

An inductive sensor can be used as a liquid flow meter by detecting the number of rotations of conductive metal teeth rotating because of liquid flow through a pipe, where the sensor measures the variation in electromagnetic fields caused by the metal teeth during rotation, allowing for real-time monitoring and precise measurement of the flow rate.

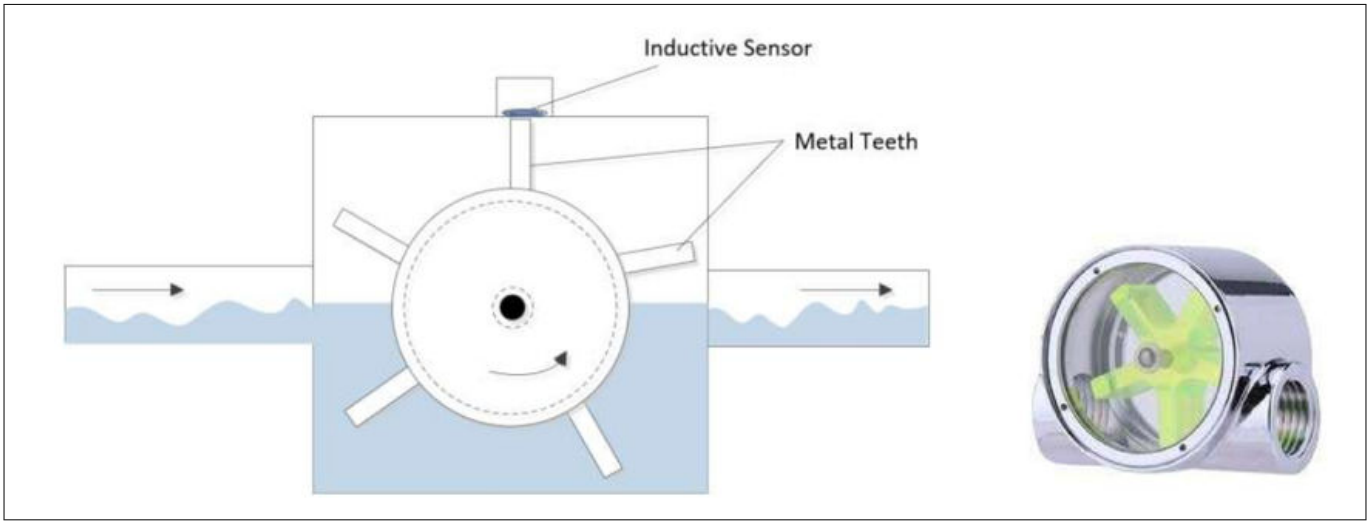

Figure 16 Flow meter application with inductive sensing

2.4.6 Linear encoder using inductive sense

An inductive sensor can be used as a linear encoder by placing metal markers evenly along the desired measurement path. The sensor is positioned to detect these markers as they pass by. As the object moves, the sensor detects each marker as inductance change. This method allows for accurate tracking of an object's position along a straight line.

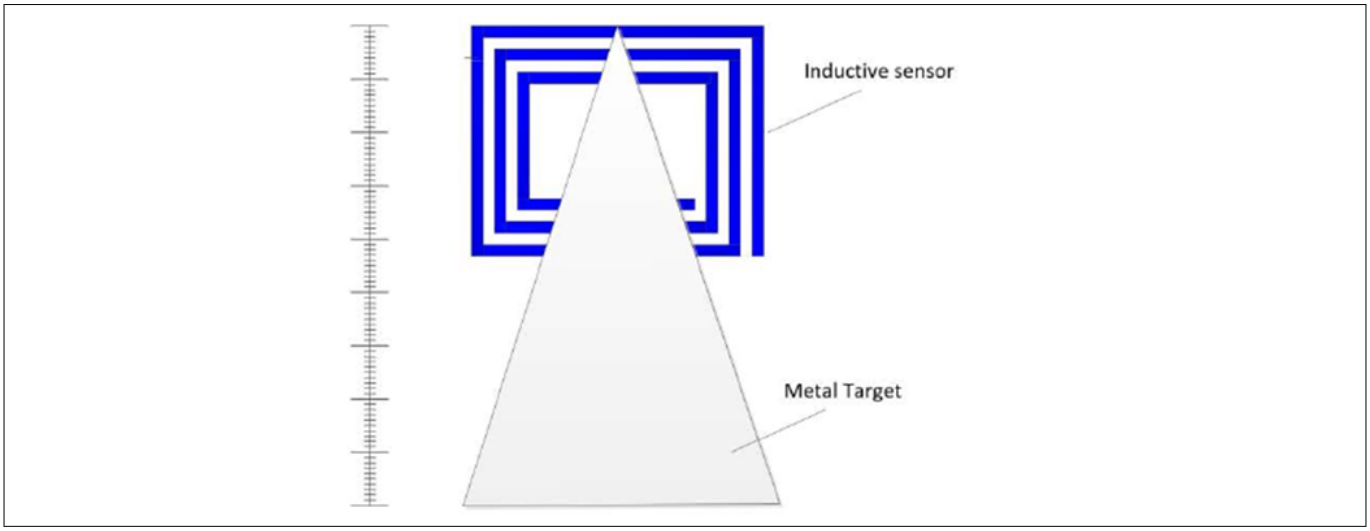

Figure 17 Linear encoder application with inductive sense

2.4.7 Metal proximity detection using inductive sense

An inductive sensor can be used as a metal proximity detector by using the sensor coil at the front of fixture as shown in Figure 18. When a metal object comes close to the sensor, it detects changes in the electromagnetic field. This method is effective for detecting and responding to the proximity of metal items in various applications.

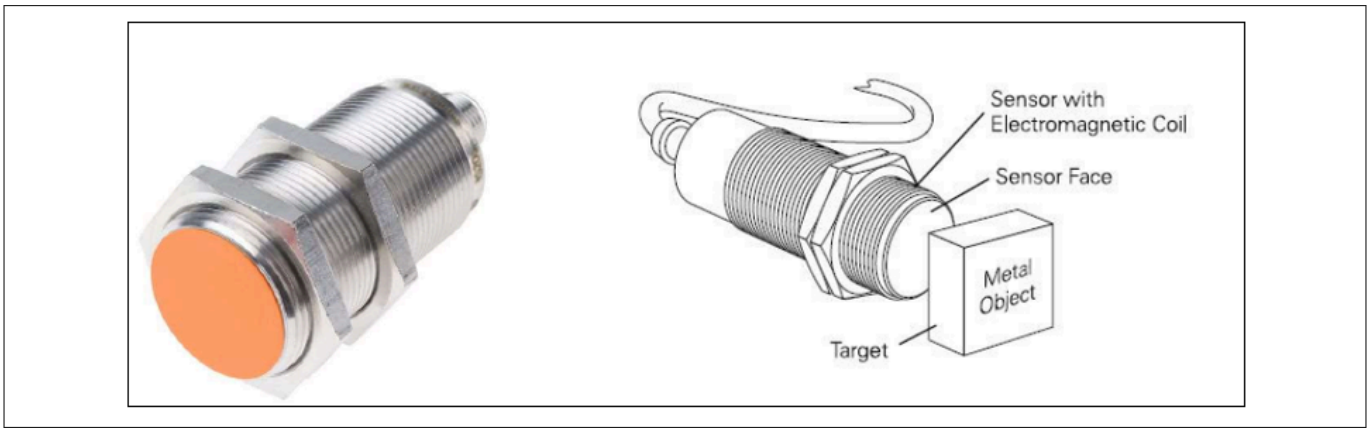

Figure 18 Metal proximity sensor

Some other applications of inductive sensors are:

- Gear shift detection using inductive sensors, providing reliable and accurate data for automotive applications
- Contactless throttle pedal applications, enabling safe and efficient operation of vehicles

3 Inductive sense hardware implementation

3.1 Hardware parameters

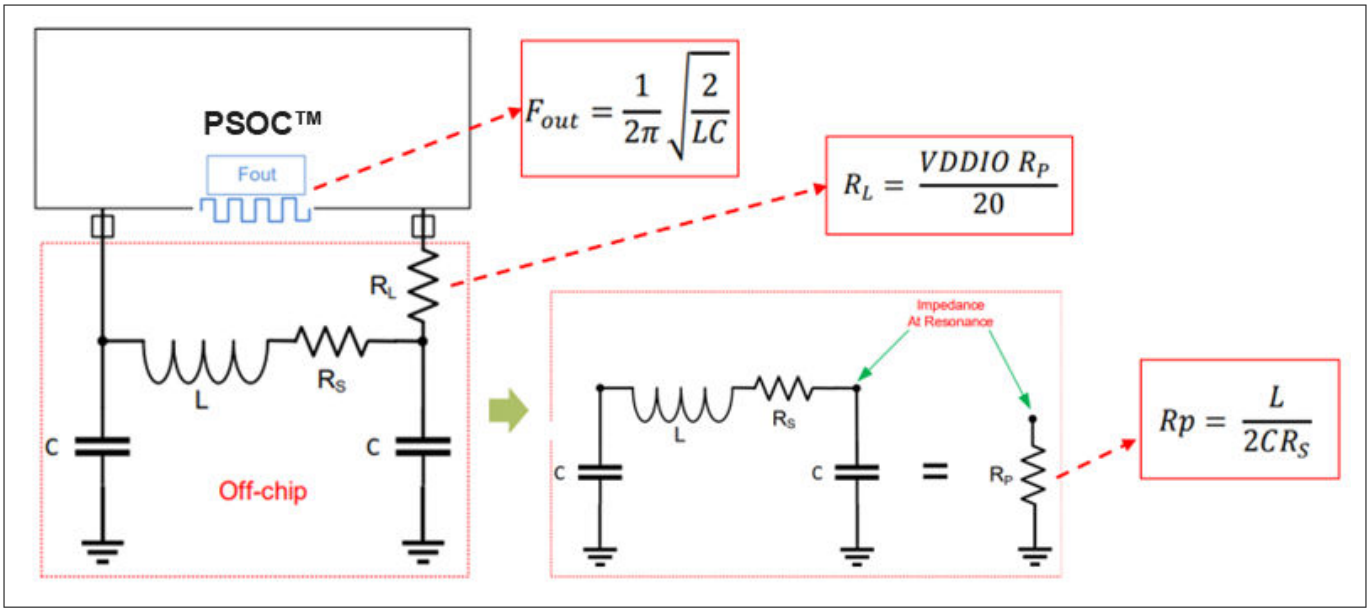

Figure 19 Oscillator-based Inductive sense architecture

3.1.1 Oscillator frequency

The oscillator frequency is generated because formation of the pierce oscillator with the combination of a smart I/O (NOT gate), an inductor (implemented as an etched coil from PCB traces), and capacitors (C1 and C2). The frequency for this oscillator can be estimated using the following equation:

$$F_{OUT} = \frac{1}{2\pi}\sqrt{\frac{2}{LC}} \quad (2)$$

Where,

- L = Inductance of the coil
- C = Capacitor value of oscillator circuit

Figure 20 depicts the relation between oscillator frequency and change in inductance due to external target influence.

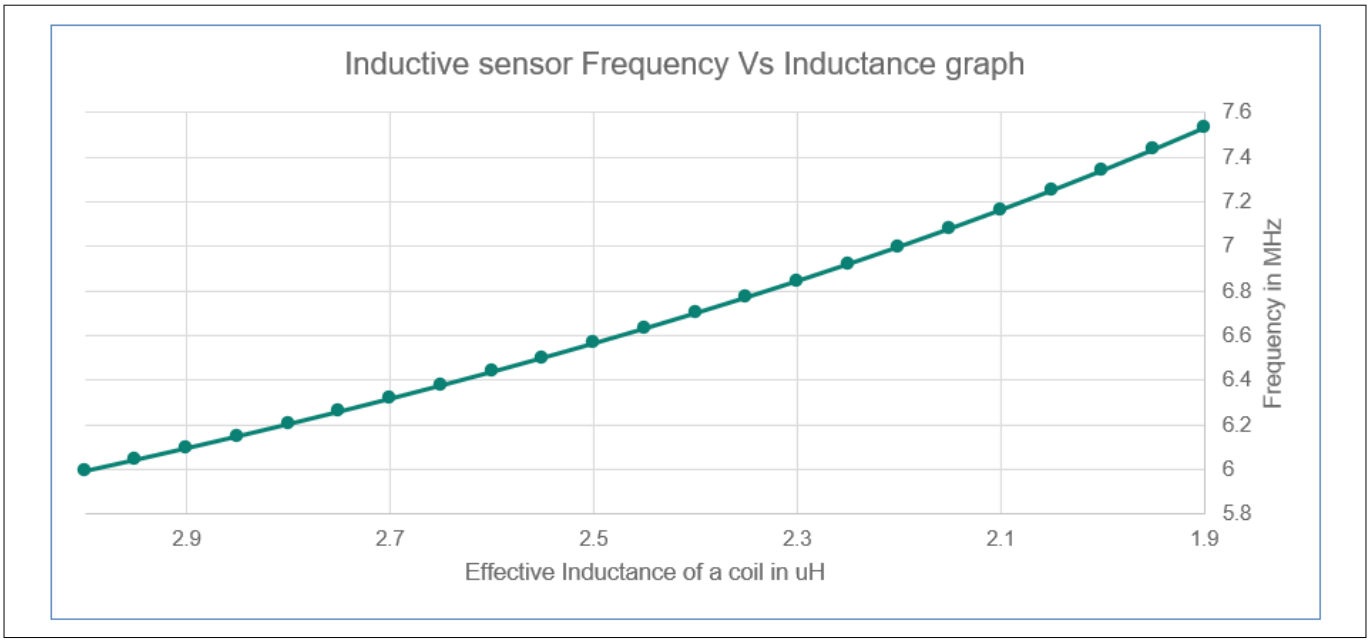

Figure 20 Frequency vs. inductance graph

3.1.2 Scan window

An internal TCPWM timer block is used to generate accurate timing intervals required for defining the scan window in inductive sensing applications. The timer block is configured with appropriate parameters to meet the specific requirements of the desired scan window duration.

This single timer block can be leveraged for managing multiple inductive sensor scans, whether performed in parallel or sequentially. In scenarios involving parallel scanning, if the scan window duration is same across multiple sensors, a single TCPWM timer block is sufficient to monitor and control the scan timing. This ensures precise time tracking and synchronization across the scanning process.

$$\text{Scan window} = \frac{1}{\text{TIMER CLOCK PERIOD}} \times \text{PERIOD} \times \text{PRESCALER} \quad (3)$$

3.1.3 Raw counts

To convert the oscillations frequency into digital format within the defined scan window, a separate counter block is used, the input to the counter block is driven by the output of the oscillator circuit, allowing the counter to generate raw counts, which are corresponding to the number of edges (falling or raising) occurring during the defined time interval. The resulting raw counts reflect the total edge transitions within the scan window and serve as the basis for calculating the oscillation frequency. The below equation used to estimate the raw counts is detailed below:

$$\text{Raw counts} = \text{Scan window} \quad F_{\text{OUT}} \times \text{N_edges} \quad (4)$$

Where,

- Scan window = Timer block configured value
- F_{out} = Oscillator frequency
- N_edges = 1 if single falling/raising edge is configured for count input of counter block; 2 if both the edges are configured for count input of counter block

3.1.4 Equivalent impedance of the circuit (Rp)

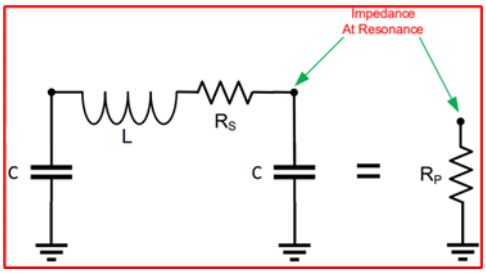

Figure 21 Equivalent impedance of oscillator circuit

The equivalent impedance of the oscillator circuit determines the current drawn from the PSOC™ GPIO pins to sustain oscillations. If the sensor's parallel resistance (Rp) is too low, the resulting current sourced by a single GPIO pin may exceed the maximum allowable limit of 25 mA, as specified in the datasheet. To prevent this, the minimum Rp value required to ensure that the inductive sensing circuit does not overdraw current from the PSOC™ GPIO pins is set to 500 Ω. A lower limit is imposed by setting an appropriate series resistor (RL) externally.

Conversely, an upper limit for Rp is necessary in scenarios where the tank circuit's impedance is relatively high, as this can cause the GPIO-supplied current to elevate the voltage at the input pin above the VDDIO level. To avoid such conditions, the maximum Rp for the circuit is defined as 10 kΩ.

$$R_P = \frac{L}{2.\mathrm{C}.R_S} \tag{5}$$

The parallel impedance of the tank network (Rp) must be between 500 Ω and 10 kΩ:

- 500 Ω to limit the current to ≤ 25 mA (GPIO maximum output current spec)
- 10 kΩ to limit the pin voltage ≤VDDIO

3.1.5 Series resistor (RL)

A series resistor (RL) is necessary to regulate the current flowing into the oscillator circuit. The value of RL is directly proportional to the VDDIO voltage, as the current supplied by the GPIO pin also scales with this voltage. The limits imposed on the parallel resistance (Rp) are determined by selecting an appropriate RL value, which can be calculated using the following equation:

$$\mathrm{RL} = \frac{\mathrm{VDDIO}.R_P}{20} \tag{6}$$

Where,

- RL = series resistor
- VDDIO = The supply voltage VDD is limited to 2.7 V to 5 V operation

3.1.6 Inductance of a coil (L)

The following equations can be used to estimate the parameters of the inductor from coil dimensions.

***Note**: These expressions are not as accurate as a field solver and are used for approximations only.*

The inductance of the coil can be estimated using the following expression derived from (4) and is based on a Current Sheet Approximation.

$$Lgmd = \frac{\mu_0 n^2 D_a v g C_1}{2}\left(\ln\left(\frac{C_2}{p}\right) + C_3\rho + C_4\rho^2\right) \quad (7)$$

Where:

- C1, C2, C3, C4 = Layout constants dependent on the shape of the coil. See Table 2
- D_{avg} = 0.5 x (D_{out} + D_{in})
- ρ_{out}= The fill factor = (D_{out} – D_{in})/(D_{out} + D_{in})
- μ_0 = The permeability of free space, 4 π x 10^{-7}
- n = The number of turns

Table 2 Coefficients for the current sheet method

Coil shape	C1	C2	C3	C4
Square	1.27	2.07	0.18	0.13
Hexagonal	1.09	2.23	0.00	0.17
Circle	1.00	2.46	0.00	0.20

An expression to estimate the RS of a conductor due to the skin effect has been derived from High-Speed Digital Design: A Handbook of Black Magic. This equation provides an estimate of the AC resistance of the inductor in ohms/inch. Below table shows some values for ρR (the relative resistivity of the coil material, compared to copper). Note that the value of RS calculated in the following equation is the unit value. To get the total value of RS, the unit value needs to be multiplied by the length of the trace which can be measured from the PCB Design tool by making a sample coil of desired shape.

$$R_S = \frac{2.16 \times 10^{-7} \cdot \sqrt{f\rho_R}}{2\,(\mathrm{w} + \mathrm{d})} \quad (8)$$

Where,

- w = trace width (inches)
- d = trace height (inches)
- f = frequency (Hz)
- ρR= relative resistivity, compared to copper = 1.00
- RS = AC resistance (ohms/inch)

Table 3 Conductivity of different materials compared to copper

Metal	Resistivity (x 10E-7 ohms inch)	Resistivity relative to copper
Copper	6.7879 10	1.000
Aluminum	10.3606	1.526
304 SS	302.847	44.616
Titanium Alloy	667.29	98.306

3.1.7 Design limits for inductive sensing applications

Table 4 provides the minimum and maximum values for all the above parameters discussed in this section.

Table 4 Minimum and maximum values for above parameters

Parameter	Min.	Max.
Frequency (F_{OUT})	1 MHz	12 MHz
Tank Impedance (R_P)	500 Ω	10 kΩ
VDDIO	2.7 V	5.0 V
Resolution	8 bits	16 bits
Raw counts	–	65535
Scan Window	–	Until raw counts reaches maximum value of 65535

3.2 Hardware design flow

The following flowchart outlines the hardware design process for an inductive sensor used in HMI applications with PSOC™. It covers steps from selecting the application type to final tuning and verification. The process ensures optimal coil design, component integration, and system performance.

3 Inductive sense hardware implementation

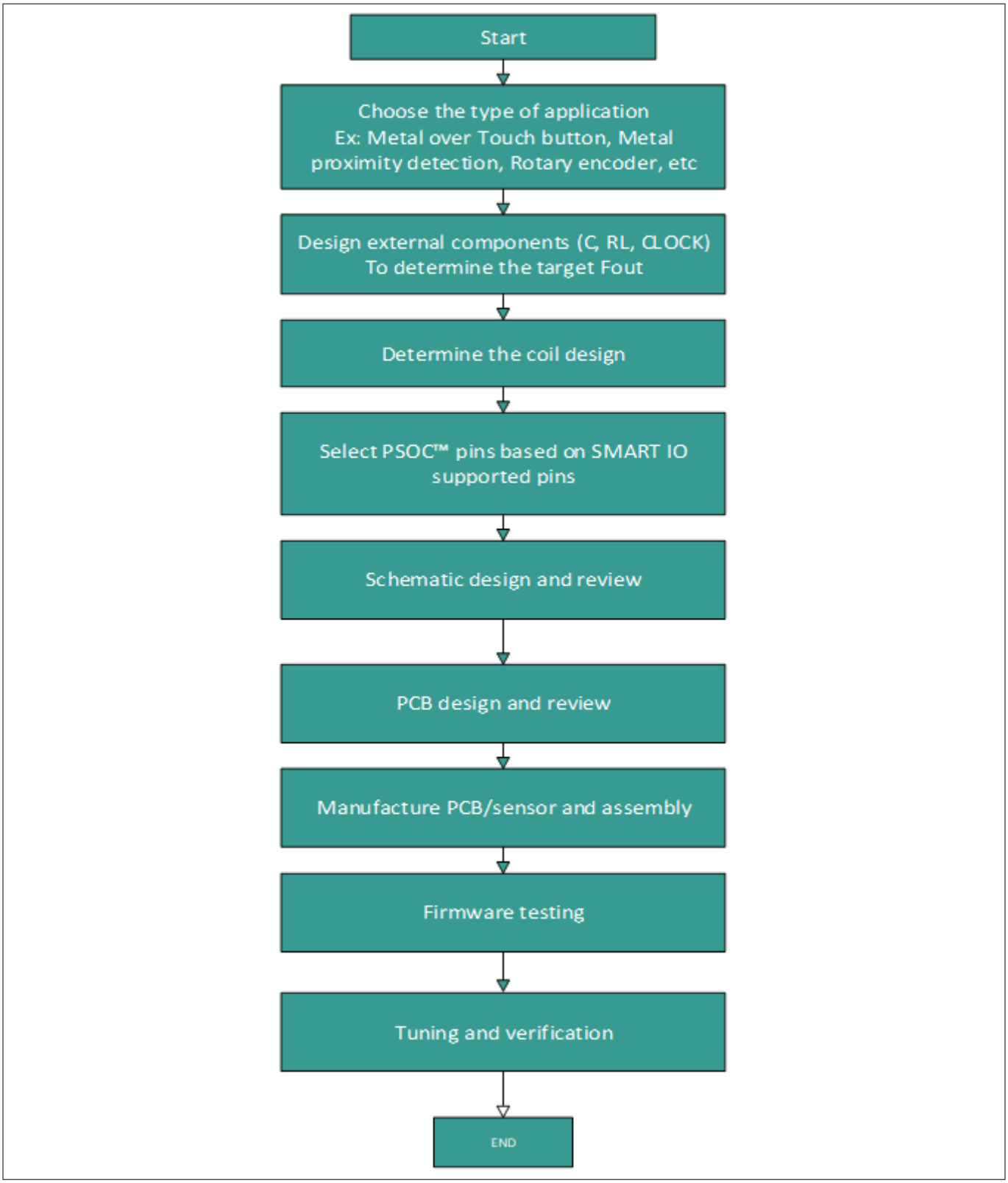

Figure 22 Hardware design process

- **Choose the type of application:**
  - Select the specific application type, such as Metal over touch button, metal proximity detection, or rotary encoder, to guide the design

- **Design external components (C, RL, CLOCK) to determine the target F_{out}:**
  - Select and design external components (capacitor, resistor, inductance, and clock) to achieve the desired output frequency (F_{out}). See the Design external components (C, RL, Clock) section for more information
- **Determine the coil design:**
  - Define the coil's specifications and layout based on the chosen application. See the Sensor shapes section for more details on sensor shapes
- **Select the PSOC™ pins based on the smart I/O supported pins:**
  - Choose the appropriate PSOC™ pins that support SMART IO functionality. See the Layout guidelines section for details on pin mapping
- **Schematic design and review:**
  - Create and evaluate the circuit schematic to ensure accuracy and functionality. See the Schematics guidelines section for schematic design guidelines
- **PCB design and review:**
  - Design the printed circuit board (PCB) layout and review it for compliance with design requirements. See the Layout guidelines section for details on layout guidelines
- **Manufacture PCB/sensor and assembly:**
  - Produce the PCB and assemble the sensor components
- **Firmware testing:**
  - Test the firmware to ensure it operates correctly with the sensor hardware. See Section 4 for firmware details
- **Tuning and verification:**
  - Adjust and validate the system performance to meet the application’s specifications

3.3 Sensor design

The following flowchart describes the detailed steps on inductive sensor coil design.

3 Inductive sense hardware implementation

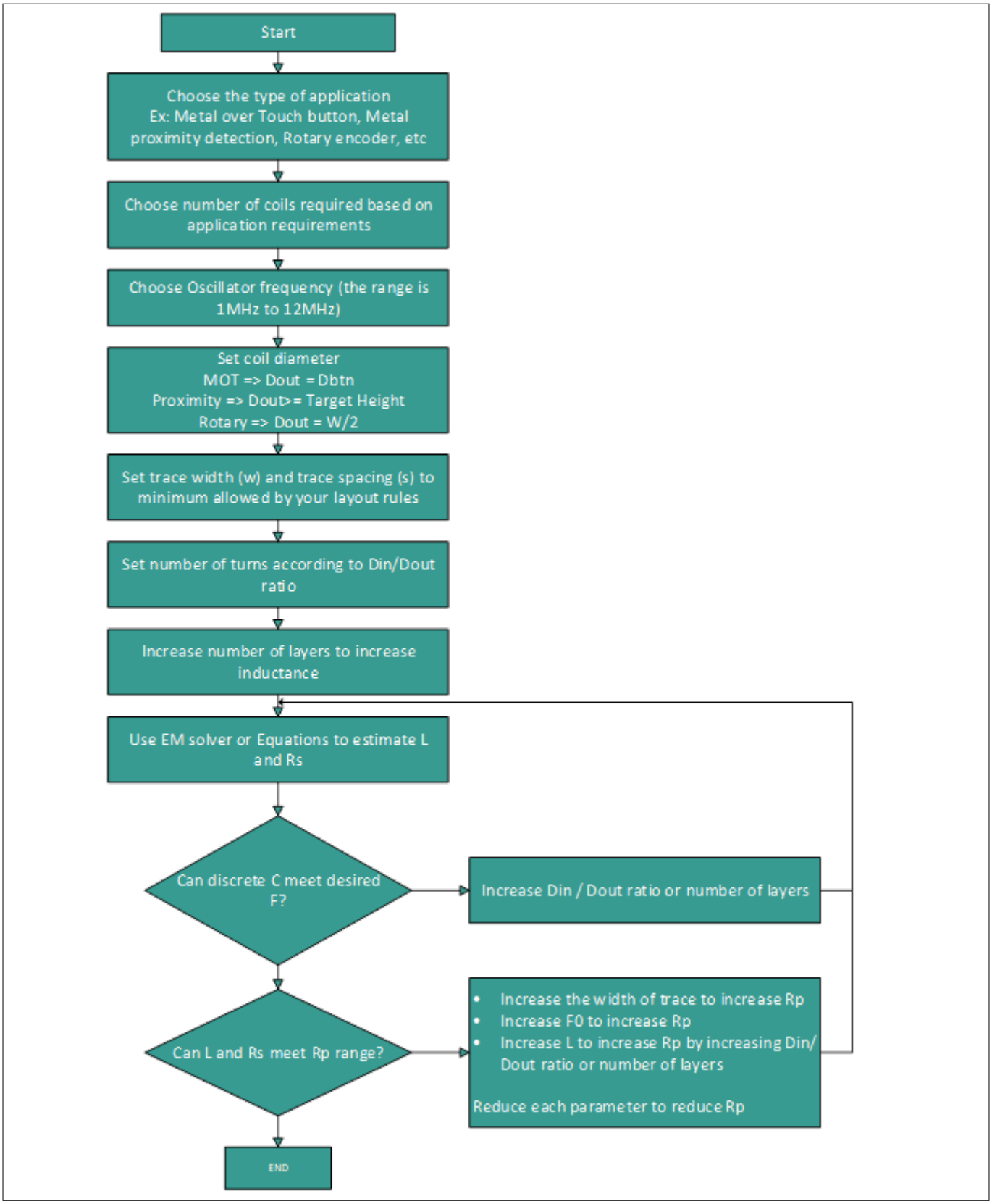

Figure 23 Sensor design flowchart

1. **Choose type of application:**
   - Select the application (e.g., metal over touch button, metal proximity detection, rotary encoder) to define the design requirements. See the Inductive sensing applications section for possible applications
2. **Choose number of coils:**
   - Based on the type of application, the number of coils required varies
     - Metal over touch – single coil
     - Rotary encoder - Determine the number of targets (N) required to meet the desired angular resolution
3. **Choose resonant frequency**:
   - Choose the resonant frequency that best suits the system. The supported range is 1 MHz to 12 MHz
4. **Choose the coil diameter**
   - **Metal Over touch:** Set the coil diameter (D_{out}) to be equal to button diameter Dbtn
   - **Proximity:** Set the coil diameter (D_{out}) to be greater than or equal to Dprox
   - **Rotary encoder:** Set the coil diameter (D_{out}) to be equal to half of mean width of one target
5. **Set trace width/space:**
   - Set the trace width (w) and space (s) to a minimum for the PCB design technology you are using
6. **Set the number of turns:**
   - Set the number of turns according to the Din/D_{out} ratio that you need. A guideline is to set Din/D_{out} > 0.3
7. **Maximize the number of layers:**
   - Set the number of layers to a maximum and choose a series connection between layers to maximize the inductance and therefore, maximize RP to reduce coil loss
8. **Calculate L and RS:**
   - Calculate the inductance (L) and the AC series resistance (RS) at the resonant frequency (f0) by using an EM solver or using (7) and (9)
9. **Optimize L:**
   - Determine whether the value of L satisfies the chosen f0 using (1) for an available discrete capacitance, C. If not, you should optimize the Din/D_{out} ratio or the number of layers
10. **Optimize RP**
    - Calculate RP from (3). If it does not satisfy the RP range of 350 to 50,000 (see Figure 35), consider the following:
      - **Increase RP:** Increase RP by increasing w, s, f0, or L
      - **Decrease RP:** Decrease RP by decreasing w, s, f0, or L

3.4 Sensor shapes

The shape of the inductive sensor is important because it determines the shape of the generated magnetic field and therefore the change in inductance in the presence of a target metal object. The following are common shapes of PCB and flex coils:

- **Circular coil:** Circular coils are generally used when sensing a target object that is moving orthogonal to the sensor plane
- **Hexagonal or octagonal coil:** Polygonal coils are designed to approximate circular coils in cases where a circular coil is difficult to manufacture
- **Square or rectangle coil:** Square coil provides optimal performance with respect to sensitivity in both horizontal and vertical directions

See the following figures for an example of different coil structures.

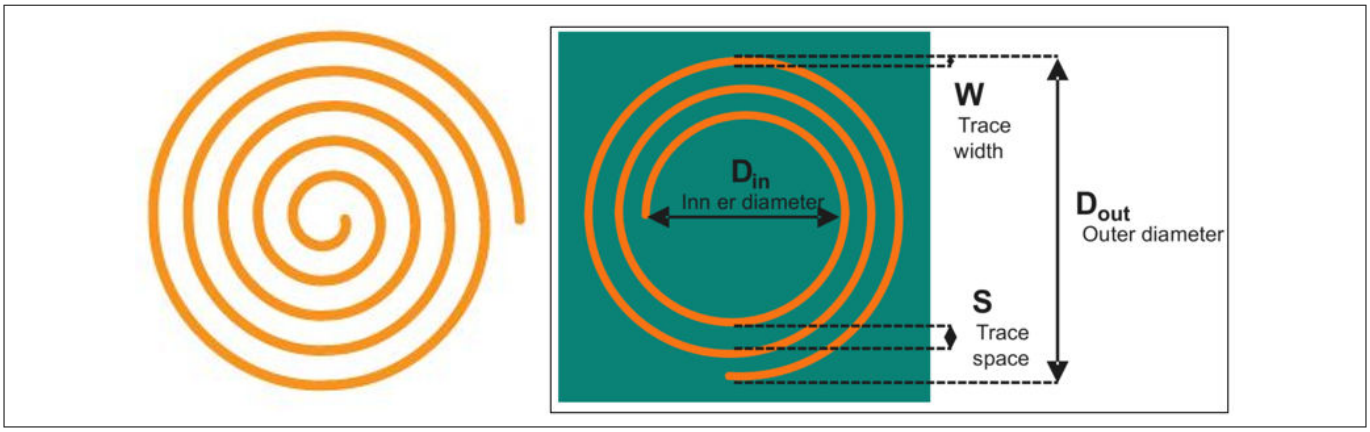

Figure 24 Circular coil shape

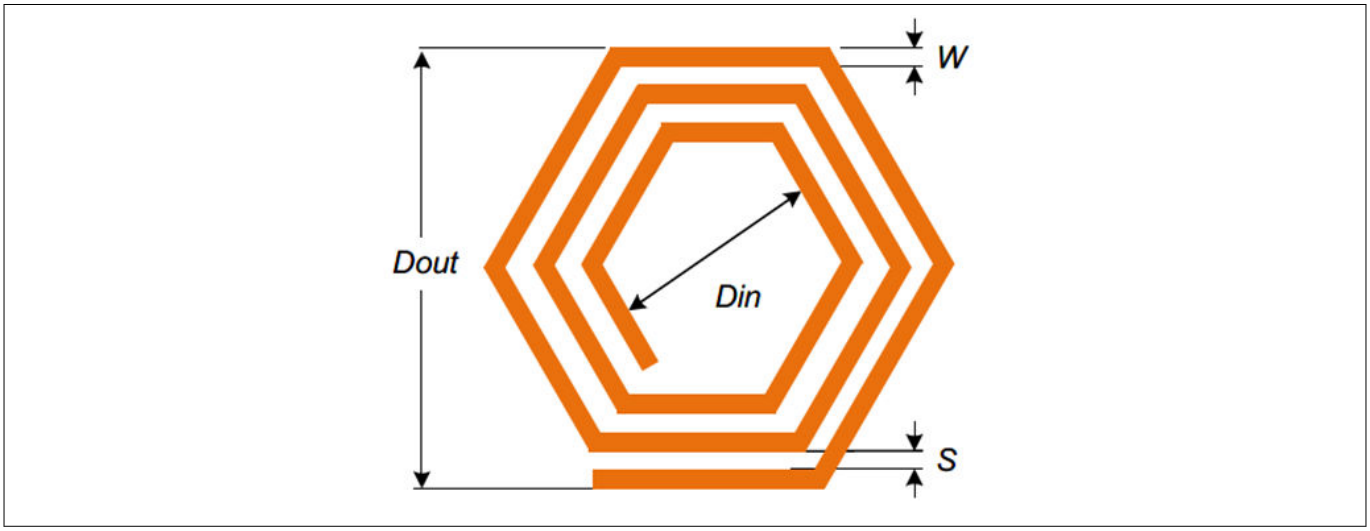

Figure 25 Hexagonal coil shape

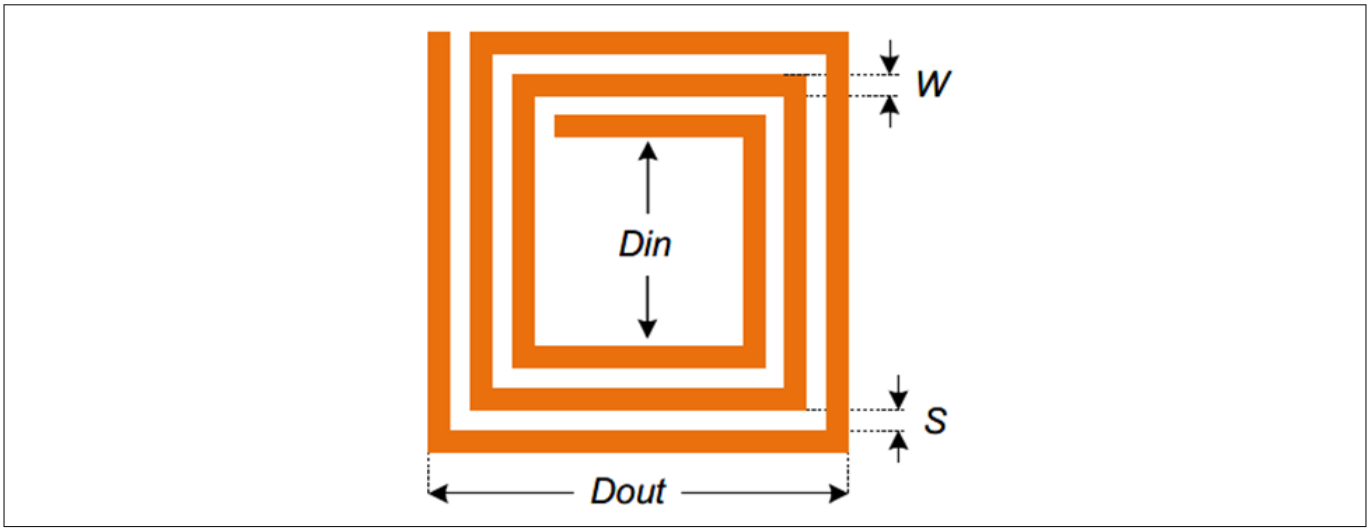

Figure 26 Square coil shape

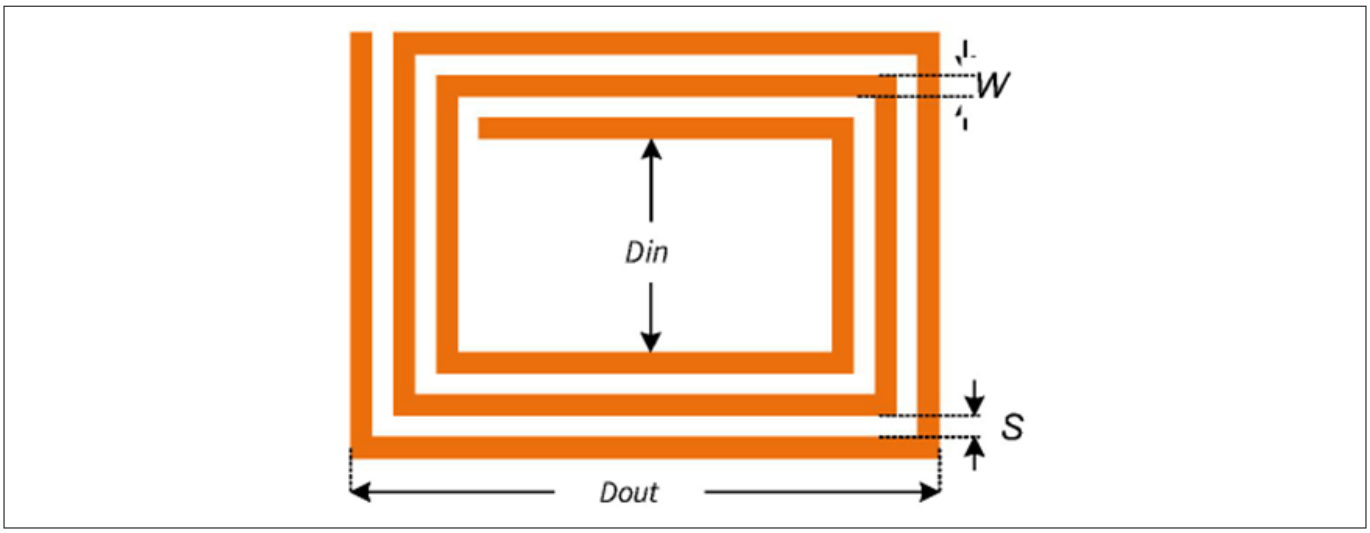

Figure 27 Rectangular coil shape

3.5 Schematics guidelines

3.5.1 PSOC™ pin selection for inductive sensor functionality

Choose pins that are compatible with smart I/O functionality, as the internal smart I/O block is used to configure an inverter circuit in conjunction with external inductance (L) and capacitance (C) components to create a pierce oscillator circuit.

The pins supporting smart I/O functionality in the PSOC™ 4700S Plus device are:

Table 5 PSOC™ 4700 Plus device smart I/O pins

Pin package	Port pin	Smart I/O
35	P1.0	SMARTIO [2].IO [0]
36	P1.1	SMARTIO [2].IO [1]
37	P1.2	SMARTIO [2].IO [2]
38	P1.3	SMARTIO [2].IO [3]
39	P1.4	SMARTIO [2].IO [4]
40	P1.7	SMARTIO [2].IO [7]
1	P2.3	SMARTIO [0].IO [3]
2	P2.4	SMARTIO [0].IO [4]
3	P2.5	SMARTIO [0].IO [5]
4	P1.6	SMARTIO [0].IO [6]
5	P2.7	SMARTIO [0].IO [7]
10	P3.0	SMARTIO [1].IO [0]
11	P3.1	SMARTIO [1].IO [1]
12	P3.2	SMARTIO [1].IO [2]
13	P3.3	SMARTIO [1].IO [3]

(table continues...)

Table 5 (continued) PSOC™ 4700 Plus device smart I/O pins

Pin package	Port pin	Smart I/O
14	P3.4	SMARTIO [1].IO [4]
15	P3.5	SMARTIO [1].IO [5]
16	P3.6	SMARTIO [1].IO [6]
17	P3.7	SMARTIO [1].IO [7]

3.5.2 Schematics for reference

Identify the external component values for oscillator circuit based on details provided in the Design external components (C, RL, Clock) section. The reference schematics from inductive sense evaluation board is shown in Figure 28.

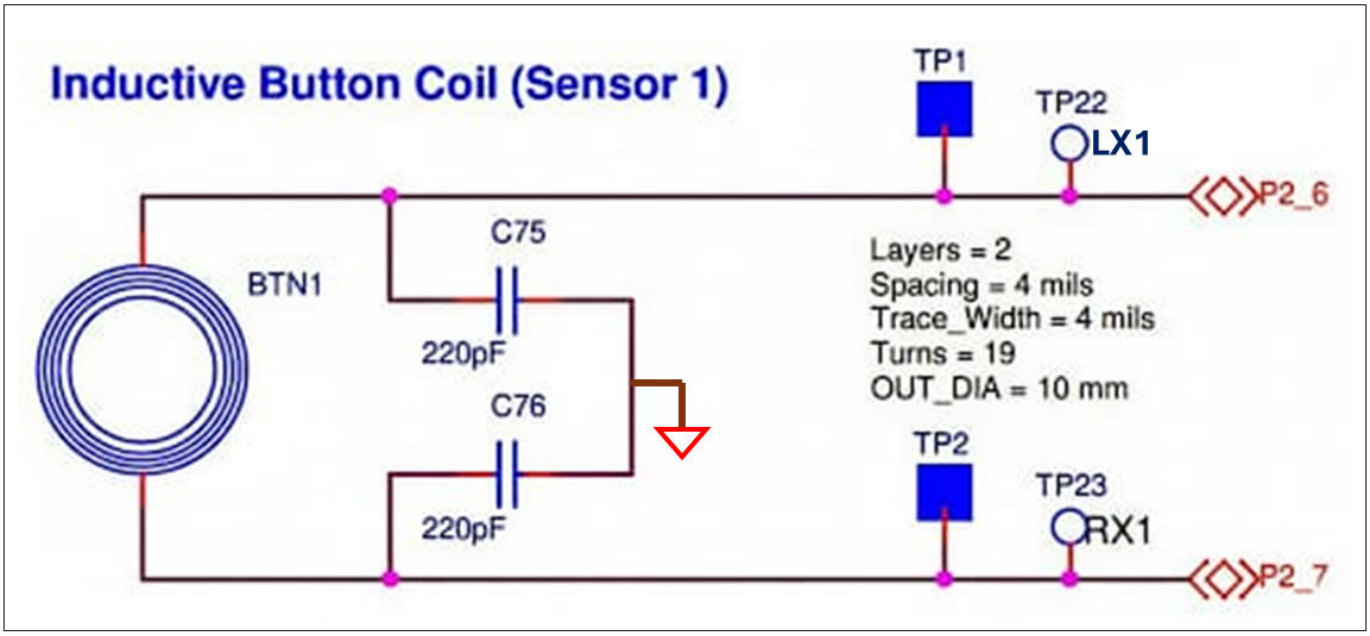

Figure 28 Reference inductive sensor schematics from the evaluation board

3.5.3 Design external components (C, RL, Clock)

1. Determine the frequency of the oscillator circuit
   - The value must be within the 1 MHz to 12 MHz range
     a. Use higher frequency for faster refresh rates or scan times
     b. Use lower frequency for slower refresh rates and better power efficiency
2. Obtain inductance (L) from the coil based on sensor dimensions and material properties
3. Measure/calculate AC resistance of the coil
   a. AC resistance can be measured using LCR meter
   b. AC resistance can be estimated based on PCB design parameters
4. Identify the capacitor to be used in the oscillator circuit (two capacitor values must be same and are recommended to be C0G/NP0)
5. Calculate Rp (Parallel equivalent impedance of oscillator circuit)

6. If Rp<500, reduce C untill Rp>= 500 ohms
   a. Recalculate F_{out}
   b. If F_{out}>12 MHz, then increase L until F_{out}<=12 MHz
7. If Rp>10K ohms, increase C until Rp<= 10 Kohms
   a. Recalculate F_{out}
   b. If F_{out}<1 MHz, then decrease L until F_{out}>1 MHz
8. Calculate RL:

$$\mathrm{RL} = \frac{\mathrm{VDDIO} \times R_P}{20} \tag{9}$$

Where,

- VDDIO = PSOC™ supply voltage
- Rp = Equivalent impedance of the oscillator circuit (see (5))

3.5.4 Material's conductivity and relative permeability

The performance of an inductive sensor is significantly influenced by the material properties of the substrate (relative permeability) and the conductor used to create the coil. These factors directly impact the inductance, resistance, and overall electromagnetic behavior of the sensor, which determine its sensitivity, frequency response, and efficiency.

Table 6 Use high-conducive materials as sensor coils or target materials

Material	Conductivity
Silver	6.2 x 10^7 S/m
Copper	5.9 x 10^7 S/m
Gold	4.5 x 10^7 S/m
Aluminum	3.8 x 10^7 S/m
Calcium	2.9 x 10^7 S/m
Beryllium	2.5 x 10^7 S/m
Rhodium	2.3 x 10^7 S/m
Magnesium	2.3 x 10^7 S/m
Iridium	2.1 x 10^7 S/m
Sodium	2.1 x 10^7 S/m
Tungsten	2 x 10^7 S/m

Table 7 Magnetic material and their relative permeability

Material	Relative permeability
Copper	0.9999906
Silver	0.9999736
Lead	0.9999831
Air	1.00000037

(table continues...)

Table 7 (continued) Magnetic material and their relative permeability

Material	Relative permeability
Oxygen	1.000002
Aluminum	1.000021
Titanium	1.00005
Platinum	1.0003
Manganese	1.001
Cobalt	250
Nickel	600
Iron	280,000

3.6 Layout guidelines

1. Metal (Routing, Ground Shields, and so on) is as possible as far from coil (any metal > 0.5 x D_{out})
2. Via size ≒ 15 mil (0.381 mm)
3. Coil Vias close to coil sensors
4. Capacitors placed near coil sensors
5. Parallel routing LX, RX: Trace width of LX and RX assumed W. The distance between them is 2 W (near edge to near edge)
6. Reference: Inductive Sensing Design Guide

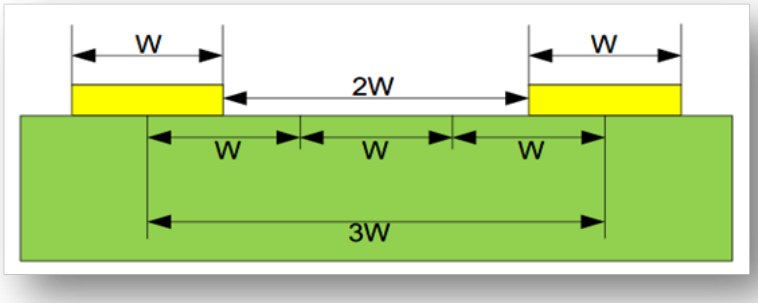

Figure 29 Layout spacing measurements

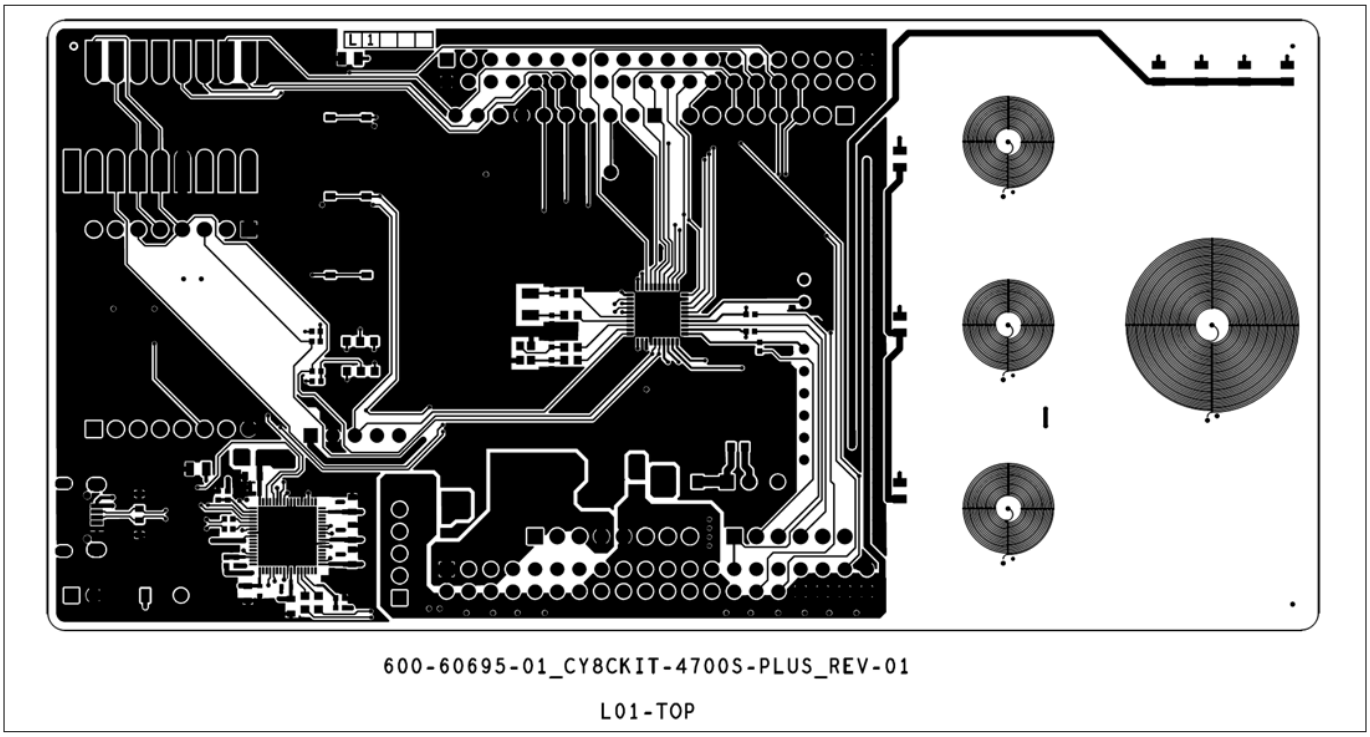

Figure 30 CY8CKIT-4700 Plus top layer

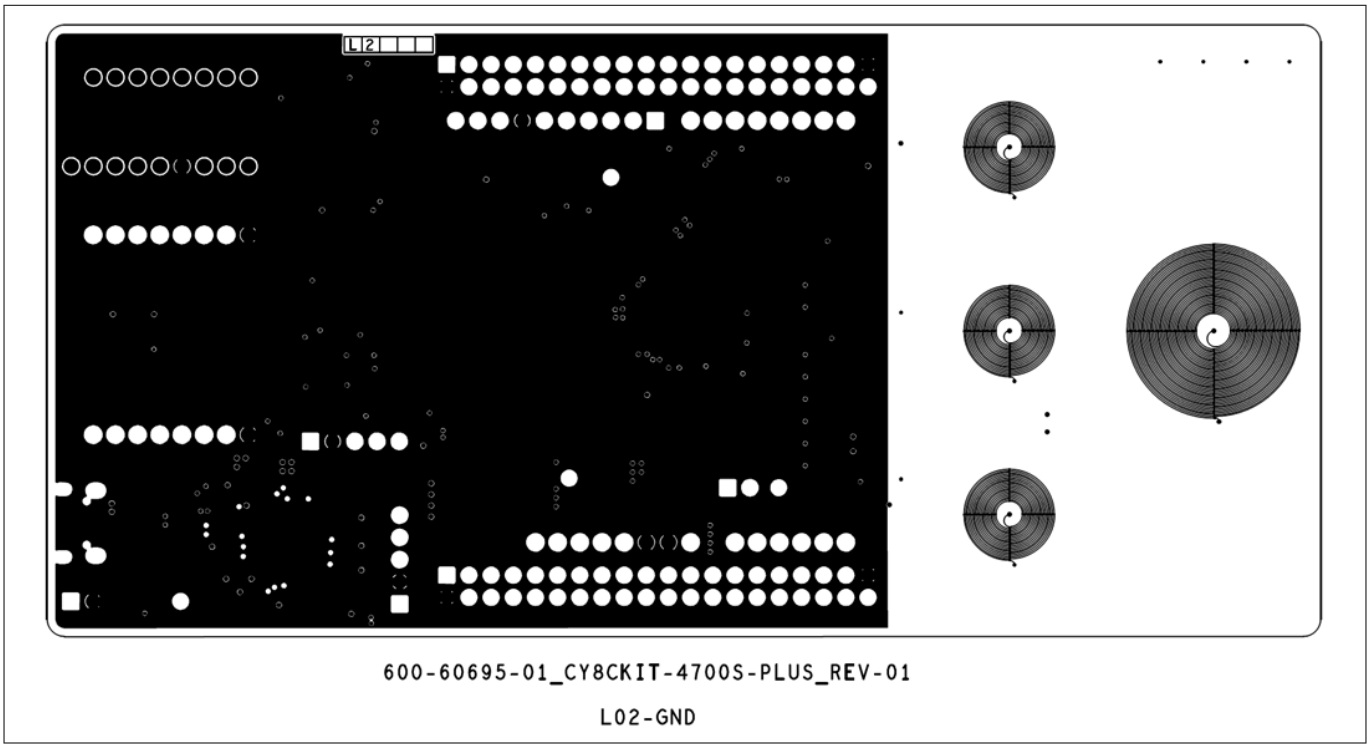

Figure 31 CY8CKIT-4700 Plus ground layer

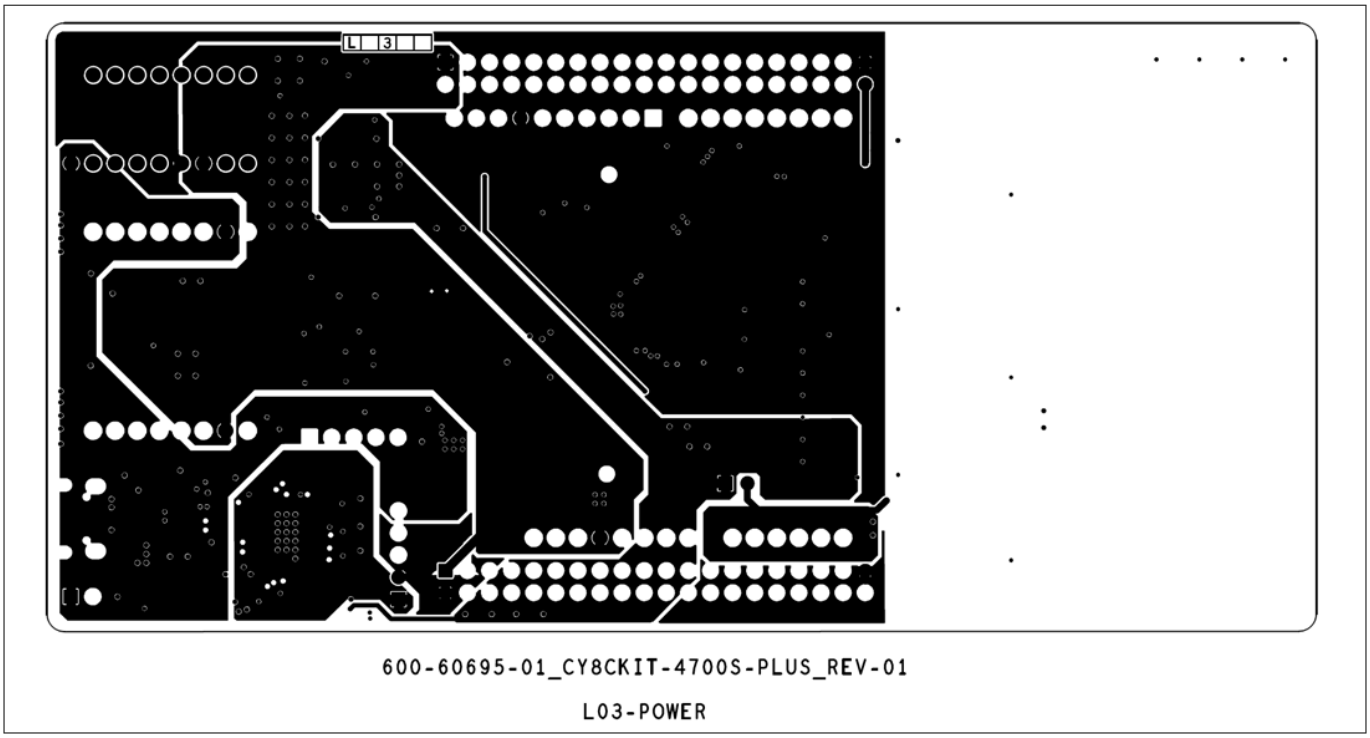

Figure 32 CY8CKIT-4700 Plus power layer

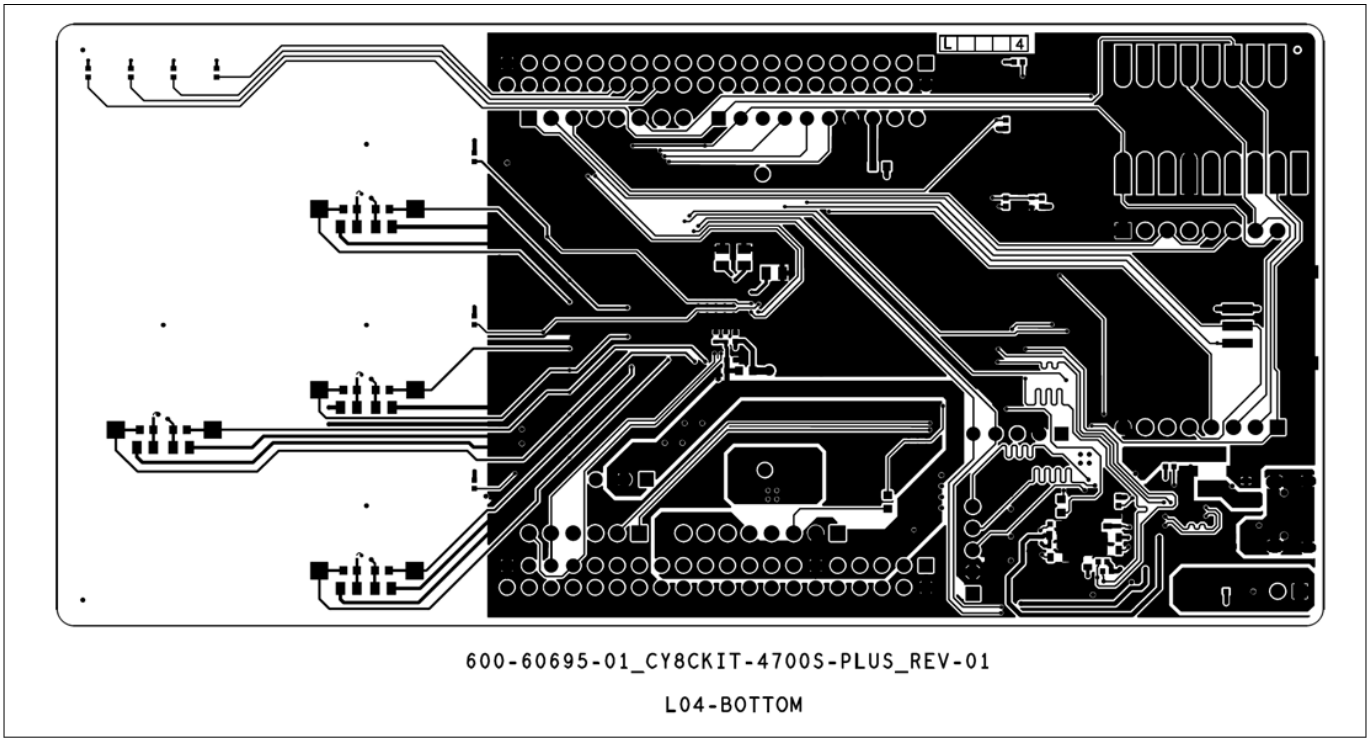

Figure 33 CY8CKIT-4700 Plus bottom layer

3.6.1 Generating coil footprint

Contact Infineon Support to get the Inductive_Coils GUI tool, which can generate inductive coils for PCB footprints.

Following are the steps to use Inductive_Coils GUI tool:

1. Unzip the *Inductive_Coils.zip* file to your local windows machine
2. Navigate down to the unzipped folder *C:\..\Inductive_Coils\application.windows64*
3. Run *Coil_Design_MASTER_2_Patterns_v5p1.exe.* When the GUI is run, the main window will pop up
4. From the drop-down menu select coil's shape (**Circular** or **Rectangular**)
5. Modify the rest of the coil input parameters as required
6. Click **OK**

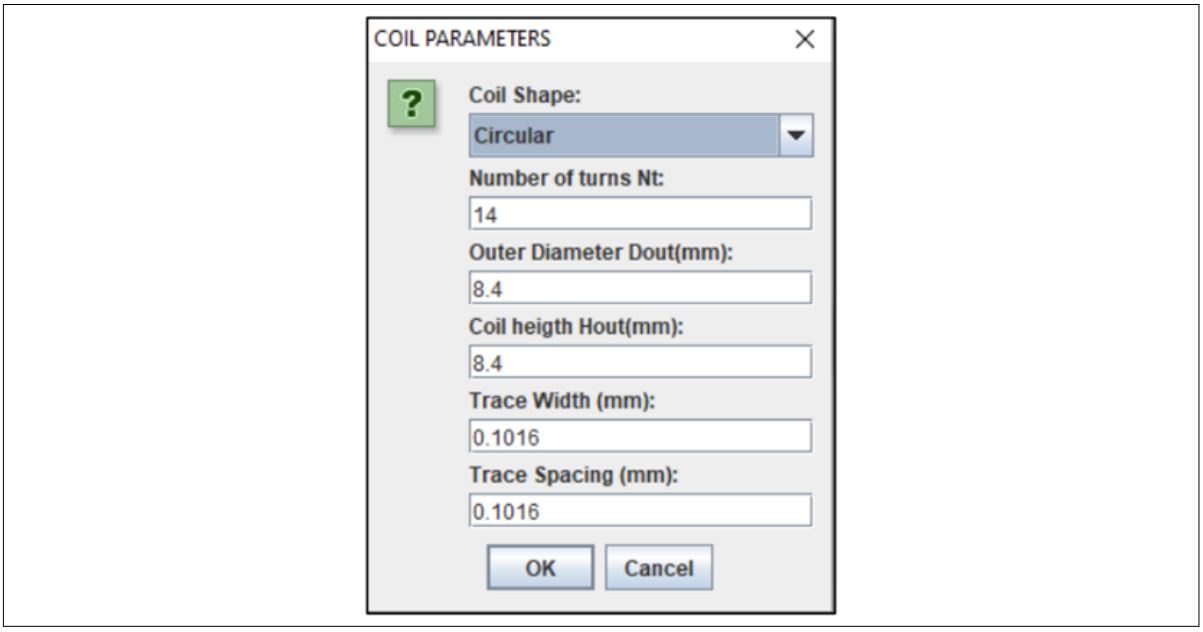

Figure 34 Inductive_coils GUI tool

If there is no pattern design rule errors or warnings, a pop-up window will now show the coil's final parameters

7. Click **OK**/**MODIFY** as required

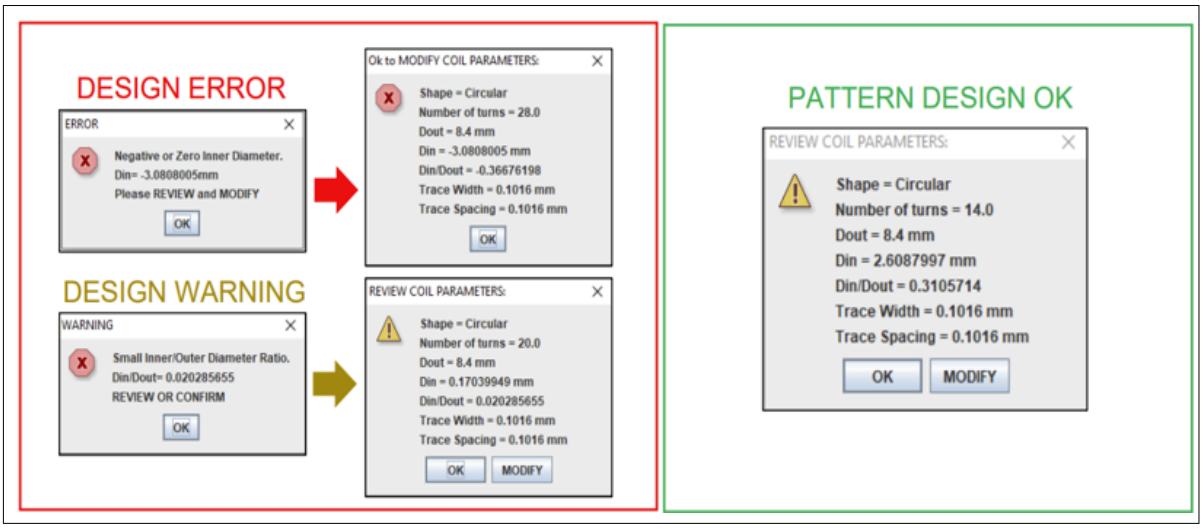

Figure 35 Inductive_coils GUI Output

Once the pattern DXF file is completed a pop up window will let you know. The output DXF file can be found at the GUI's root folder

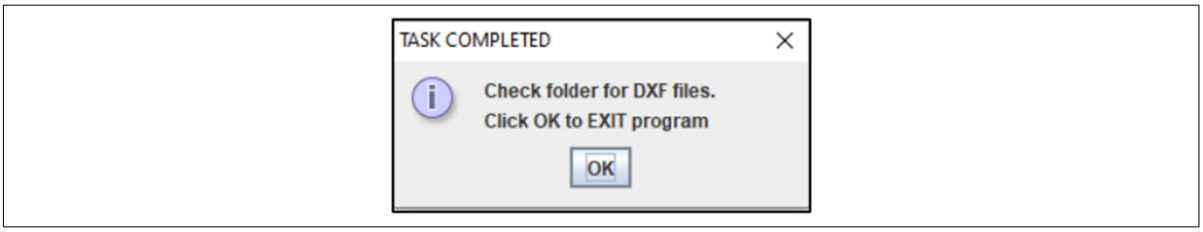

Figure 36 Task completion pop-up

The file naming structure is as shown in the following figure

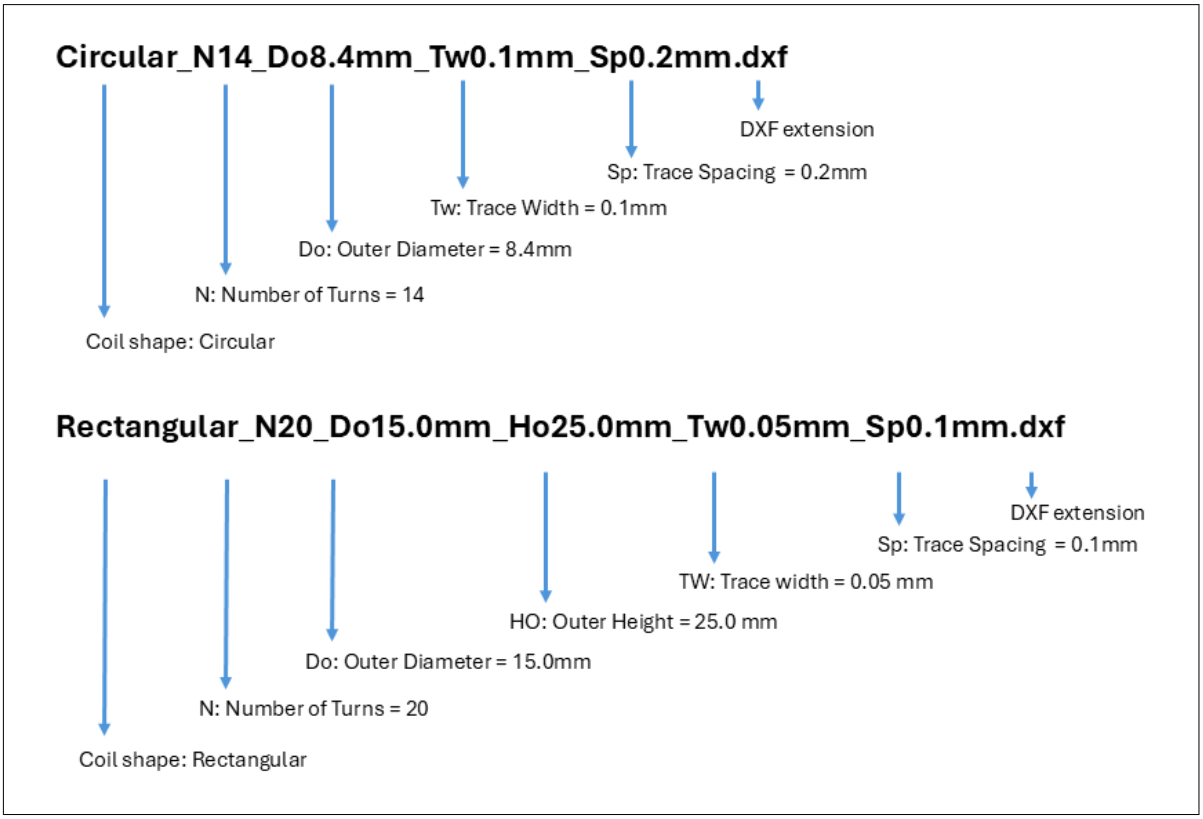

Figure 37 Naming structure of files generated from Inductive_coils GUI tool

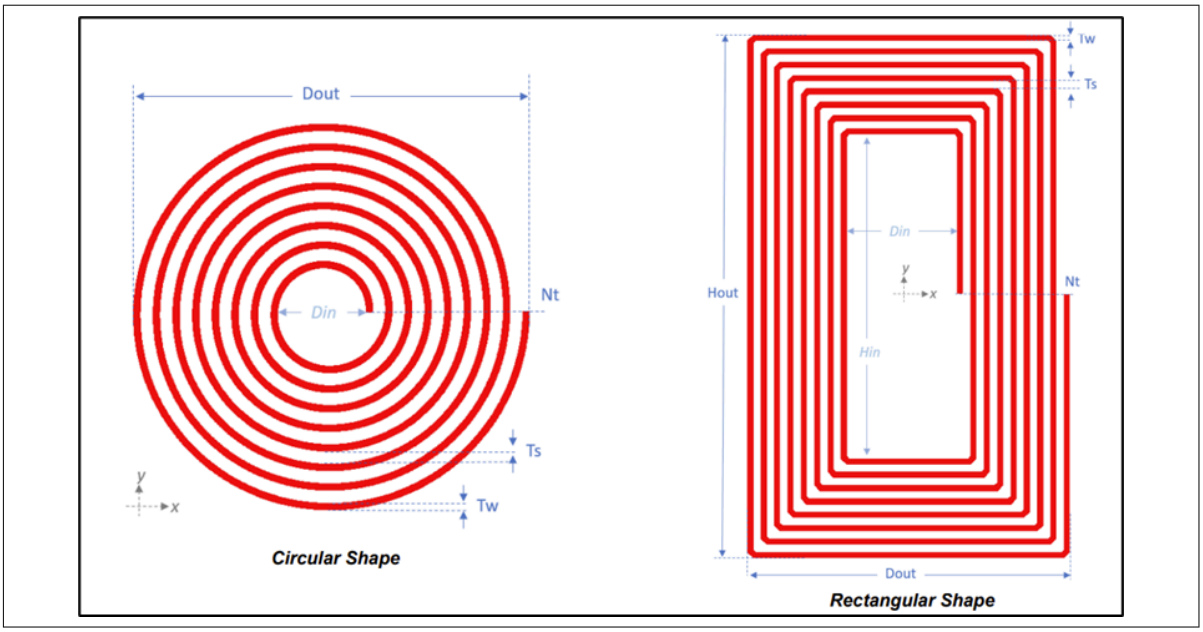

Figure 38 Geometric 2D view of the coil's parameters

3.6.1.1 Inductive coils GUI tool: Coil's input parameters range

Table 8 Coil input parameters range

Input parameter	Description	Range [Min., Max.]
Nt	Number of turns	[1, 5000]
D_{out}	Outer Diameter	[5, 500] mm
H_{out}	Coil outer height (Only Rectangular)	[10, 1000] mm
TW	Trace Width	[0.05, 20] mm
TS	Trace Spacing	[0.05, 20] mm

3.7 Performance analysis of inductive sense methodology

Table 9 Performance analysis parameters

Parameter	Typical spec	Conditions
Detection Range	1.5x D_{out}	16 bit scan, SNR=5
Noise Floor	0.0021%	16 bit scan, Free-Air (no metal target present)
Precision	1.3 µm	16 bit scan, target at 5% of D_{out}, SNR=5
Sensitivity	4 counts/µm	16 bit scan, target at 5% of D_{out}
Noiseless Precision	0.252 µm	16 bit scan, target at 5% of D_{out}
Operating Frequency Range	1 MHz-12 MHz	–

(table continues...)

Table 9 (continued) Performance analysis parameters

Parameter	Typical spec	Conditions
Refresh Rate	2.731 ms	16 bit scan, per sensor
Scanning Mode	Sequential/Parallel	–
External Components	2 capacitors, 1 resistor, 1 XTAL	–

3.7.1 SNR vs. target distance



Figure 39 Graph SNR vs. target distance

Figure 39 shows the Signal-To-Noise Ratio (SNR) versus metal target position. In this case, the signal corresponds to the raw count's delta provoked by a metal target displacement of 1 µm. The y-axis of the graph is scalable for displacements different than 1 µm. For example, to obtain the SNR for a 10 µm displacement, the corresponding y-axis SNR value must be multiplied by 10.

3.7.2 Distance delta (metal target displacement) for SNR = 5

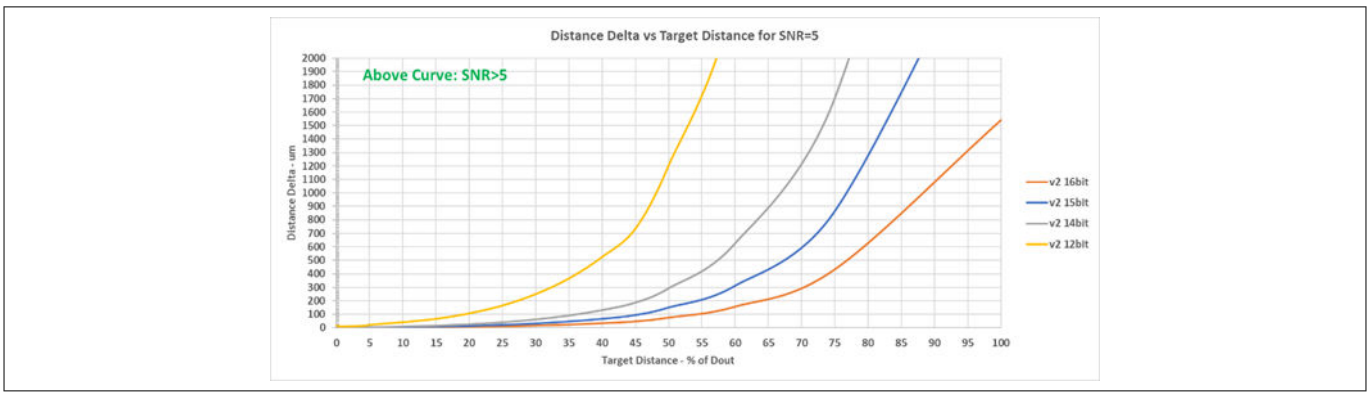

Figure 40 Distance delta (metal target displacement) for SNR = 5

Each curve determines the metal target displacement needed to achieve a Signal-To-Noise Ratio; SNR = 5. Therefore, above the curve SNR >5, and below the curve SNR <5. For instance, if we have a metal target positioned at a distance equivalent to 50% of the coil's diameter (D_{out}), we will need a minimum target displacement of approximately 75 µm at16 bit, 150 µm at15-bit, and 300 µm at14-bit to obtain an SNR ≥5.

3.7.3 Raw counts vs. target distance

Figure 38 shows the unfiltered converted data (raw counts) versus the metal target distance for different scan resolutions (bits).

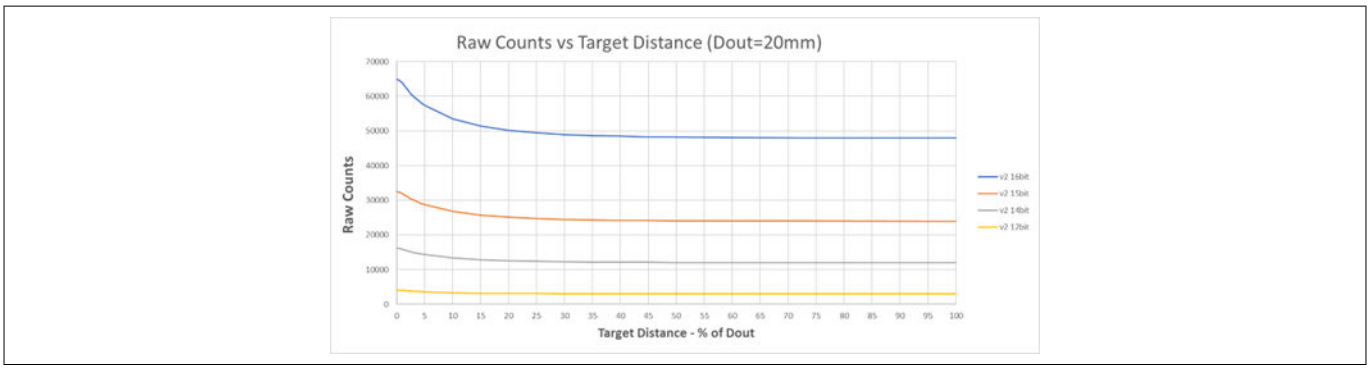

Figure 41 Raw counts vs. target distance

3.7.4 Noiseless precession

Figure 42 shows the metal target displacement that can be detected in the absence of noise. In this ideal scenario, the plotted target displacement would result in one raw count delta.

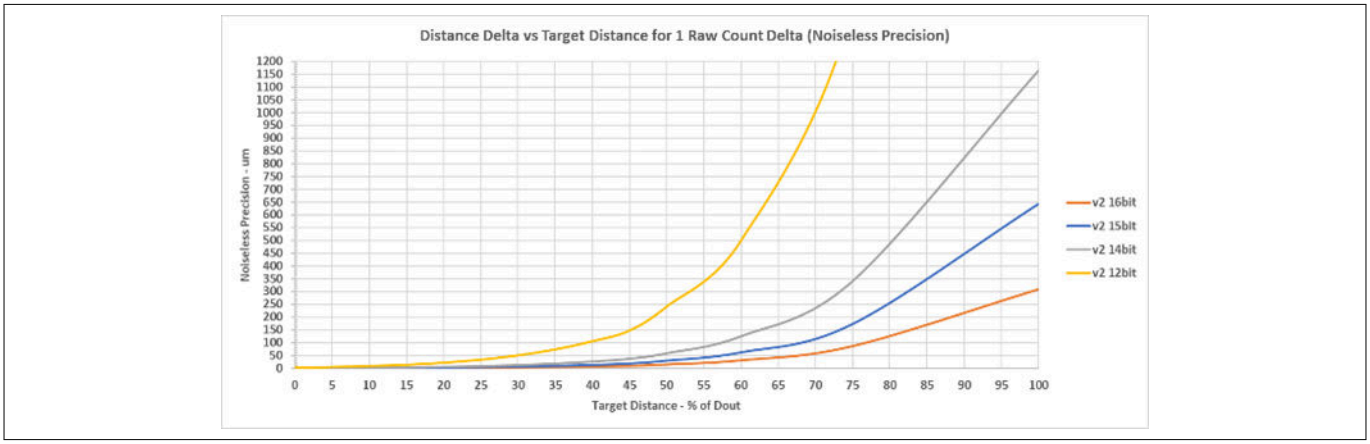

Figure 42 Noiseless precession

3.7.5 Sensitivity

Figure 43 illustrates the sensitivity of the inductive sensor, measured in raw counts per micrometer (raw counts/ µm), as a function of the distance between the target metal and the base sensor. This sensitivity is expressed relative to the outer diameter of the sensor.

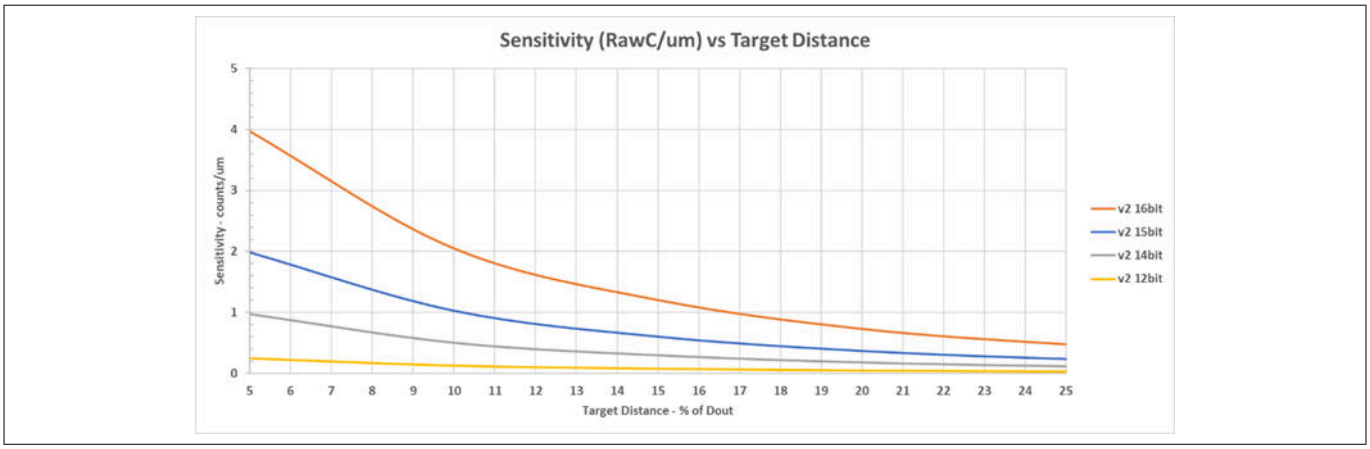

Figure 43 Sensitivity

3.7.6 Noise floor (%)

Noise floor is the ratio between the peak-to-peak raw counts noise and the averaged (or DC) raw counts (1000 samples). The noise floor is measured for scan resolutions 12 to 16 as shown in Figure 44.

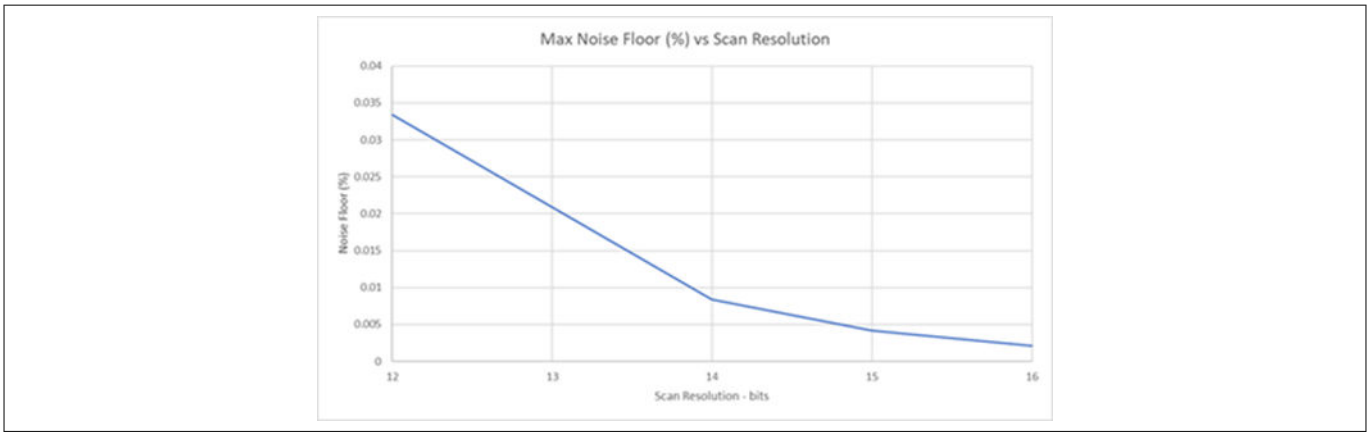

Figure 44 Noise floor (%) vs. scan resolution

3.7.7 Effective number of bits (ENOB)

Table 10 Effective number of bits (ENOB)

Resolution (% of D_{out})	Target distance (mm)	ENOB (bits)
5	1	12.9
10	2	12.8
20	4	12.7
40	8	12.7
60	12	12.5
100	20	11.0

ENOB is the actual resolution of the system when intrinsic noise is considered. For example, a 14 bit scan has an ENOB=13 bits, so the same resolution of a noiseless 15 bit scan.

3.7.8 Scan time

Figure 45 shows the scan time measurement with F_{max}=12 MHz, where the maximum oscillator frequency leads to measurement of minimum scan time required for each resolution.

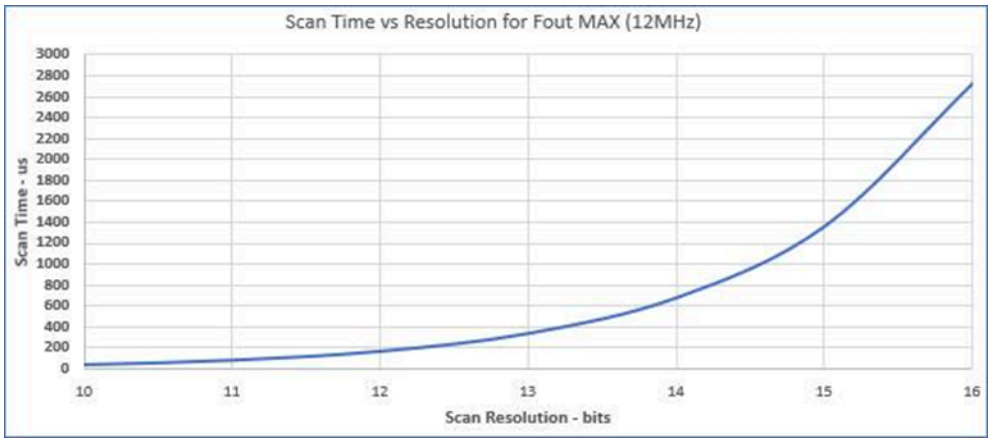

Figure 45 Scan time vs. resolution of scan

3.7.9 Detection range

Figure 46 depicts the maximum distance at which a metal target can be detected while maintaining a Signal-to-Noise Ratio (SNR) of 5. As a metal target, initially positioned at a distance greater than $2xD_{out}$, is moved closer to the sensor, the raw counts begin to increase. The detection range is defined as the point at which the raw counts exceed five times the peak-to-peak noise (corresponding to SNR=5). The measured peak-to-peak noise refers to the noise level observed at the initial distance, where $d > 2xD_{out}$.

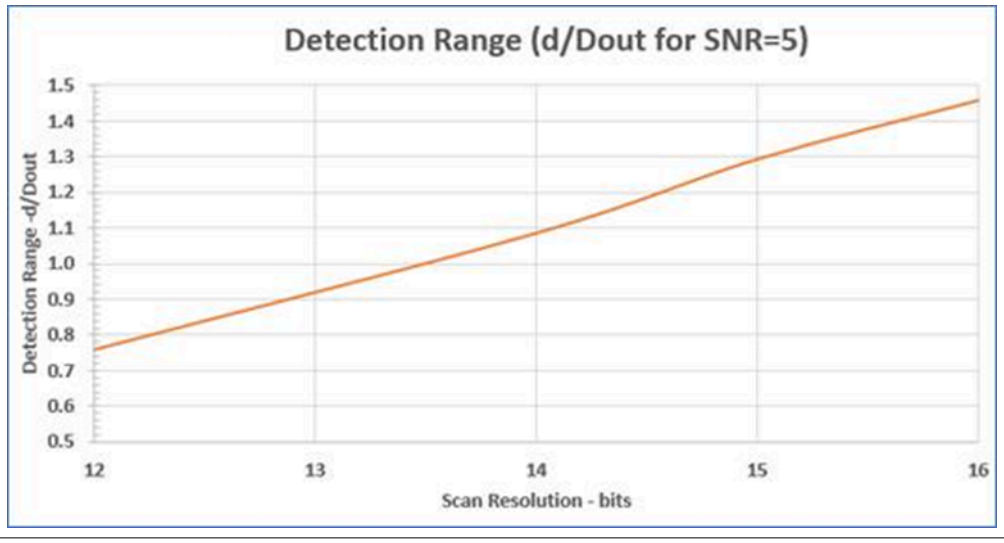

Figure 46 Detection range vs. scan resolution

4 Firmware implementation

This section describes the guidelines for the firmware and configuration of internal blocks for inductive sensing operation.

4.1 Inductive sense library

The PSOC™ 4700S Plus based oscillator inductive sensing libraries are designed and tested within Infineon and are available to customers on request basis, to request for the libraries, create a case in Infineon Support.

The libraries contain APIs, Variables, and Tuning parameters.

4.1.1 Application Program Interface (API)

1. **void magsense_v2_ScanAllSensors(void)**

   Description: This function scans all the senors.

   Input parameter: None

   Return value: None

2. **void magsense_v2_process_Init(void)**

   Description: This function initializes force data processing variables such as raw count filter history, baseline and diffcount based on MagSense_V2 rawcount.

   Input parameter: None

   Return value: None

3. **void magsense_v2_Process(void)**

   Description: This function performs all force data processes.

   The following tasks are executed as part of processing all sensors:

   a. Apply rawcount offset and rawcount scaling
   b. Apply rawcount CMF filter
   c. Apply rawcount IIR filter
   d. Update diffcount for all the sensors

   This function is called only after all the sensors are scanned. Calling this function multiple times without sensor scanning causes unexpected behavior.

   Input parameter: None

   Return value: None

4.1.2 Variables

1. **magsense_v2_rawcount:**

   Description: This array stores MagSense_v2 rawcounts, updated after calling MagSense_V2 scan/process functions.

   Type: 4-byte (32-bit) unsigned (uint32_t)

   Array Length: 4 for 4 inductive sensors

2. **magsense_v2_baseline**

   Description: This array stores MagSense_v2 baselines.

   Type: 4-byte (32-bit) unsigned (uint32_t)

   Array Length: 4 for 4 inductive sensors

3. **magsense_v2_diffcount**

   Description: This array stores MagSense_v2 diffcounts updated after performing MagSense_V2 process function.

Type: 4-byte (32-bit) signed (int32_t)

Array Length: 4 for 4 inductive sensors

4.1.3 Tuning parameters

1. **MagSense_V2 Scan:**

   MAGSENSE_V2_SCANTIME

   Set the scan time for one sensor

2. **MagSense_V2 Process – Rawcount Offset:**

   MAGSENSE_V2_POS_OFFSET_SNS#

   Add the offset values on rawcounts. # is sensor number

   MAGSENSE_V2_NEG_OFFSET_SNS#

   Subtract the offset values on rawcounts. # is sensor number

3. **MagSense_V2 Process – Rawcount Scaling:**

   MAGSENSE_V2_SCALER_SNS#

   Scaling factors on rawcounts. This scaling factor is divided 128. A value greater than 128 is increasing rawcount and smaller than 128 is decreasing rawcount. # is sensor number

4. **MagSense_V2 Process – Rawcount CMF Filter:**

   MAGSENSE_V2_RAW_CMF_ENABLE

   Enable/Disable rawcount CMF filter. (1 - Enabled/0 – Disabled)

   MAGSENSE_V2_RAW_CMF_THRESH

   Rawcount CMF filter threshold

5. **MagSense_V2 Process – Rawcount IIR Filter:**

   MAGSENSE_V2_RAW_IIR_ENABLE

   Enable/Disable rawcount IIR filter (1 - Enabled/0 – Disabled)

   MAGSENSE_V2_RAW_IIR_THRESH

   Rawcount IIR filter threshold

   MAGSENSE_V2_RAW_IIR_COEF

   Rawcount IIR filter coefficient. Coefficient determines how much the current rawcount will be applied on previous filtered rawcount

6. **MagSense_V2 Baseline Reset:**

   MAGSENSE_V2_BASE_RESET_SPEED

   Force touch baseline reset speed (in refresh rate counts)

4.2 Inductive sense configuration

4.2.1 Smart I/O configuration

The smart I/O block adds programmable logic to an I/O port. It is positioned in the signal path between the high-speed I/O matrix (HSIOM) and the I/O port. The Smart I/O block is placed on this signal path, acting as a bridge that can process signals between port pins and the HSIOM, as shown in the following diagram. For more information about the smart I/O block, refer to the device reference manual and ModusToolbox™ smart I/O configurator document.

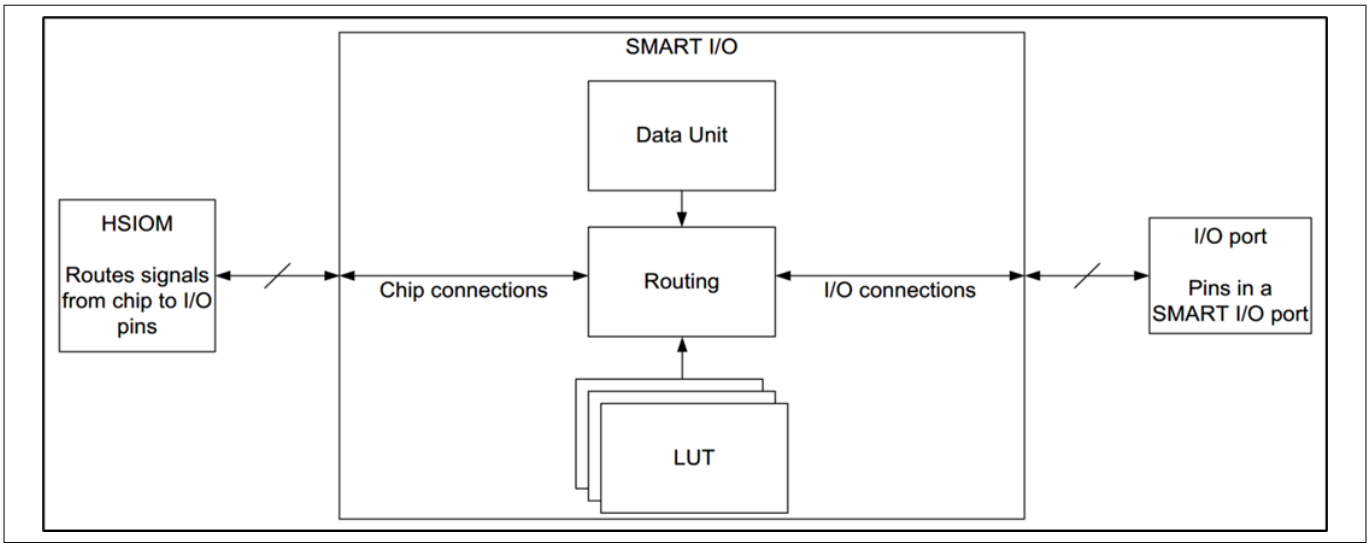

Figure 47 Smart I/O overview

There are several areas in the GUI to configure signals: Chip, I/O, Data Unit, and LUT. Inputs to the chip from the I/O port can be logically operated upon before being routed to the peripheral blocks and connectivity of the chip. Likewise, outputs from the peripheral blocks and internal connectivity of the chip can be logically operated upon before being routed to the I/O port.

The programmable logic fabric of the smart I/O can be purely combinatorial or registered with a choice of clock selection. The functionality is completely user-defined, and each path can be selectively bypassed if certain routes are not required by the fabric. Each smart I/O is associated with a particular I/O port and consumes the port entirely. If the smart I/O is not enabled, then the smart I/O functionality for that port is bypassed.

Smart I/O block in the inductive sense architecture is used as an NOT gate between two GPIO pins connected to the sensor coil, the simple smart IO configuration for inductive sense is shown in Figure 48.

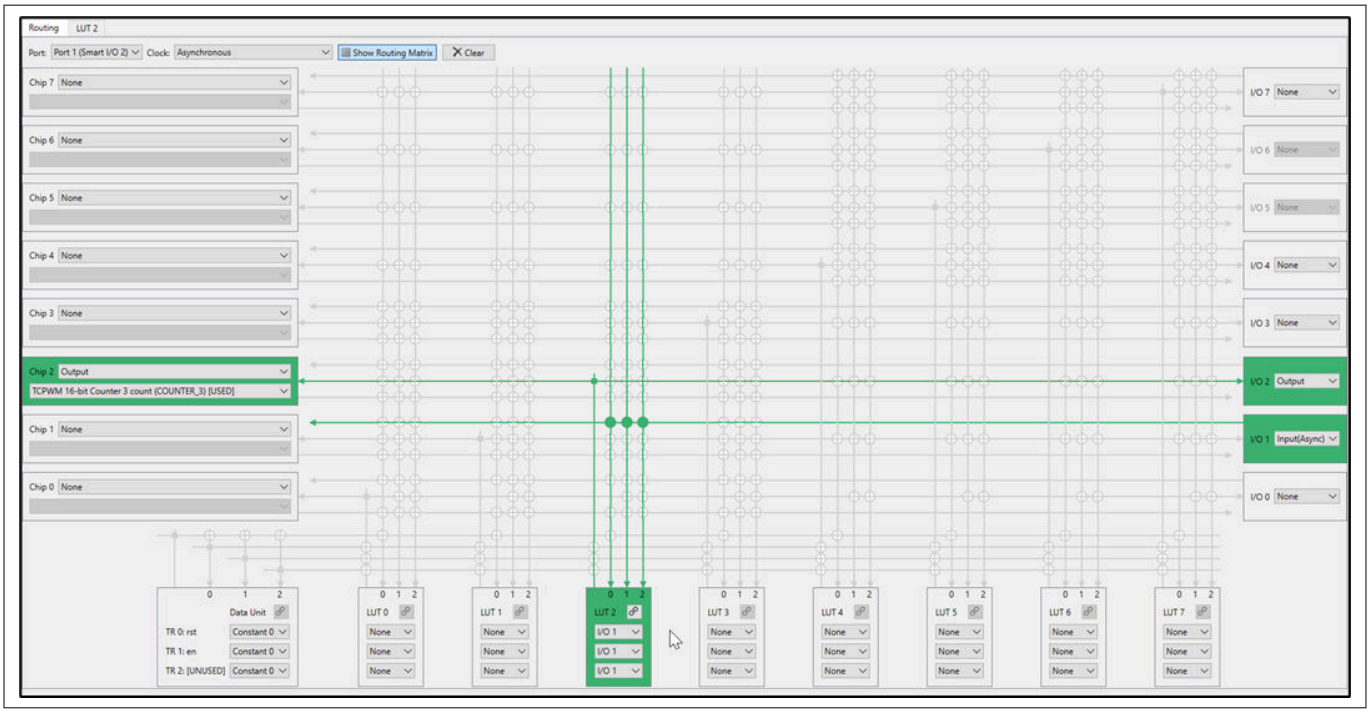

Figure 48 Example smart I/O configuration for one inductive sensor

Assuming P0.1 and P0.2 I/O pins are connected to the inductive sensor coil, the left side I/O as shown in Figure 8 is the input I/O for the smart I/O block (in this case, P0.1), while the right side pin is the output. As shown in

Figure 48, I/O 1 is connected as an Input (Async) that is configured as an input for all three inputs of LUT2. LUT2 generates an output that is connected to both I/0 2 (P0.2) and Chip 2. Chip 2 then attaches the signal as a count input to the Counter block. The configuration of LUT2 as a NOT gate is shown in Figure 49.

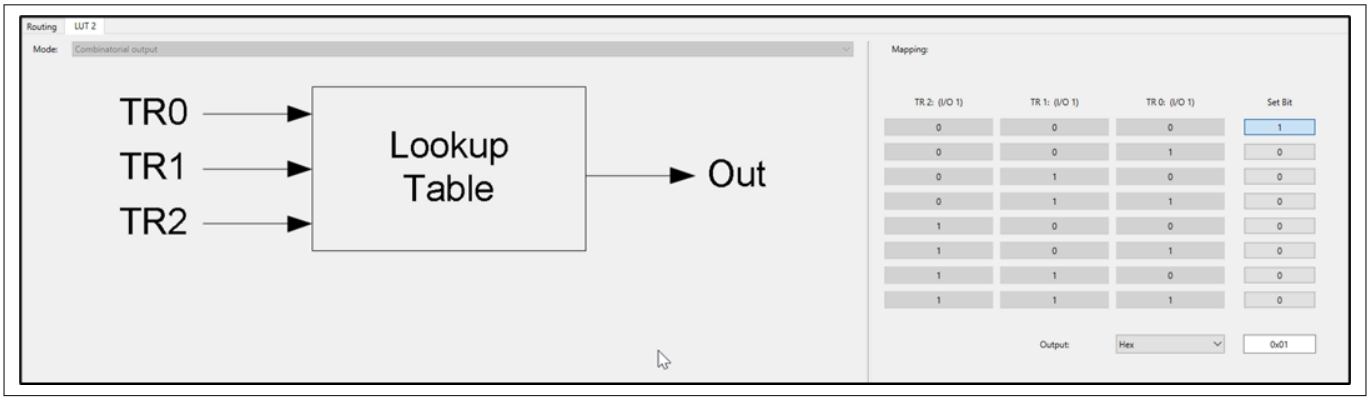

Figure 49 LUT2 configuration for NOT gate

4.2.2 TCPWM trigger terminal

As previously described, inductive sense architecture requires an internal counter resource for operation; the input (trigger signal) for the counter block is generated from the smart I/O block chip signal. There is a restriction on the I/O pins for trigger signals of the counter block, only a few of the I/O pins can be used for the trigger signals, which are limited by the internal routing of PSOC™. The datasheet for the specific device can provide additional information on the pin capabilities for trigger signals. In the case of the 4700S Plus 40-QFN device, the smart I/O port pins supporting trigger signals are P1.2, P1.3, P2.0 (unbound), P2.1 (unbound), and P3.4.

3.1 Alternate pin functions

Each port pin has can be assigned to one of multiple functions; it can, for example, be an analog I/O, a digital peripheral function, an LCD pin, or a Smart IO pin. The pin assignments are shown in the following table.

Table 2 Pin assignments

Pin	Name	Analog	Smart I/O	Alternate function 1	Alternate function 2	Alternate function 3	Alternate function 4	Deep Sleep 1	Deep Sleep 2	Deep Sleep 3	Deep Sleep 4
22	P0.0	lpcomp.in_p[0]	–	–	tcpwm.tr_in[0]	pass.dsi_sar_data_valid	scb[2].uart_cts:0	lcd.com[0]	lcd.seg[0]	scb[2].i2c_scl:0	scb[0].spi_select1:0
23	P0.1	lpcomp.in_n[0]	–	–	tcpwm.tr_in[1]	pass.tr_sar_out	scb[2].uart_rts:0	lcd.com[1]	lcd.seg[1]	scb[2].i2c_sda:0	scb[0].spi_select2:0
24	P0.2	lpcomp.in_p[1]	–	–	–	pass.dsi_sar_sample_done	–	lcd.com[2]	lcd.seg[2]	–	scb[0].spi_select3:0
25	P0.3	lpcomp.in_n[1]	–	–	–	pass.dsi_sar_data[2]	–	lcd.com[3]:0	lcd.seg[3]	–	scb[2].spi_select0:1
26	P0.4	wco.wco_in	–	–	scb[1].uart_rx:0	pass.dsi_sar_data[0]	scb[2].uart_rx:0	lcd.com[4]	lcd.seg[4]	scb[1].i2c_scl:0	scb[1].spi_mosi:1
27	P0.5	wco.wco_out	–	–	scb[1].uart_tx:0	pass.dsi_sar_data[1]	scb[2].uart_tx:0	lcd.com[5]	lcd.seg[5]	scb[1].i2c_sda:0	scb[1].spi_miso:1
28	P0.6	srss.adft_por_pad_hv exco.eco_in	–	srss.ext_clk	scb[1].uart_cts:0	–	scb[2].uart_tx:1	lcd.com[6]	lcd.seg[6]	–	scb[1].spi_clk:1
29	P0.7	exco.eco_out	–	tcpwm.line[0]:3	scb[1].uart_rts:0	–	–	lcd.com[7]	lcd.seg[7]	–	scb[1].spi_select0:1
35	P1.0	pass.ctb0_pads[0]	SmartIo[2].io[0]	tcpwm.line[2]:1	scb[0].uart_rx:1	–	–	lcd.com[8]	lcd.seg[8]	scb[0].i2c_scl:0	scb[0].spi_mosi:1
36	P1.1	pass.ctb0_pads[1]	SmartIo[2].io[1]	tcpwm.line_compl[2]:1	scb[0].uart_tx:1	–	–	lcd.com[9]	lcd.seg[9]	scb[0].i2c_sda:0	scb[0].spi_miso:1
37	P1.2	pass.ctb0_pads[2] pass.ctb0_oa0_out_10x	SmartIo[2].io[2]	tcpwm.line[3]:1	scb[0].uart_cts:1	pass.dsi_sar_data[3]:0	tcpwm.tr_in[2]	lcd.com[10]	lcd.seg[10]	scb[2].i2c_scl:2	scb[0].spi_clk:1
38	P1.3	pass.ctb0_pads[3] pass.ctb0_oa1_out_10x	SmartIo[2].io[3]	tcpwm.line_compl[3]:1	scb[0].uart_rts:1	pass.dsi_sar_data[4]:0	tcpwm.tr_in[3]	lcd.com[11]	lcd.seg[11]	scb[2].i2c_sda:2	scb[0].spi_select0:1
39	P1.4	pass.ctb0_pads[4]	SmartIo[2].io[4]	tcpwm.line[6]:1	–	–	–	lcd.com[12]	lcd.seg[12]	scb[3].i2c_scl:0	scb[0].spi_select1:1

Figure 50 Extract from datasheet showing counter trigger signals (TCPWM.tr_in) for one of the smart I/O block

Table 11 PSOC™ 4700S Plus smart I/O and TCPWM trigger pins

PSOC™ 4700S Plus - smart I/O and TCPWM trigger options			
IC Pin Number	**Port.Pin**	**Smart I/O**	**TCPWM trigger**
UnBound	P2.0	SIO [0].0	TCPWM_TR_IN[4]
UnBound	P2.1	SIO [0].1	TCPWM_TR_IN[5]
1	P2.3	SIO [0].3	–
2	P2.4	SIO [0].4	–
3	P2.5	SIO [0].5	–
4	P2.6	SIO [0].6	–
5	P2.7	SIO [0].7	–
10	P3.0	SIO [1].0	–
11	P3.1	SIO [1].1	–
12	P3.2	SIO [1].2	–
13	P3.3	SIO [1].3	–
14	P3.4	SIO [1].4	TCPWM_TR_IN[6]
15	P3.5	SIO [1].5	–
16	P3.6	SIO [1].6	–
17	P3.7	SIO [1].7	–
35	P1.0	SIO [2].0	–
36	P1.1	SIO [2].1	–
37	P1.2	SIO [2].2	TCPWM_TR_IN[2]
38	P1.3	SIO [2].3	TCPWM_TR_IN[3]
39	P1.4	SIO [2].4	–
40	P1.7	SIO [2].7	–

4.2.3 Unbounded pads in 40-QFN

Unbounded pads in the PSOC™ device are I/O pins which are not available externally in some of smaller device pin packages, however these unbound pads are available internally to the PSOC™ device and can be configured for internal routing. The 4700S Plus device has two unbound pads in port 2, which are also trigger input signals for the counter block, these unbound signals are grayed out in the smart I/O configuration tab as shown in Figure 51.

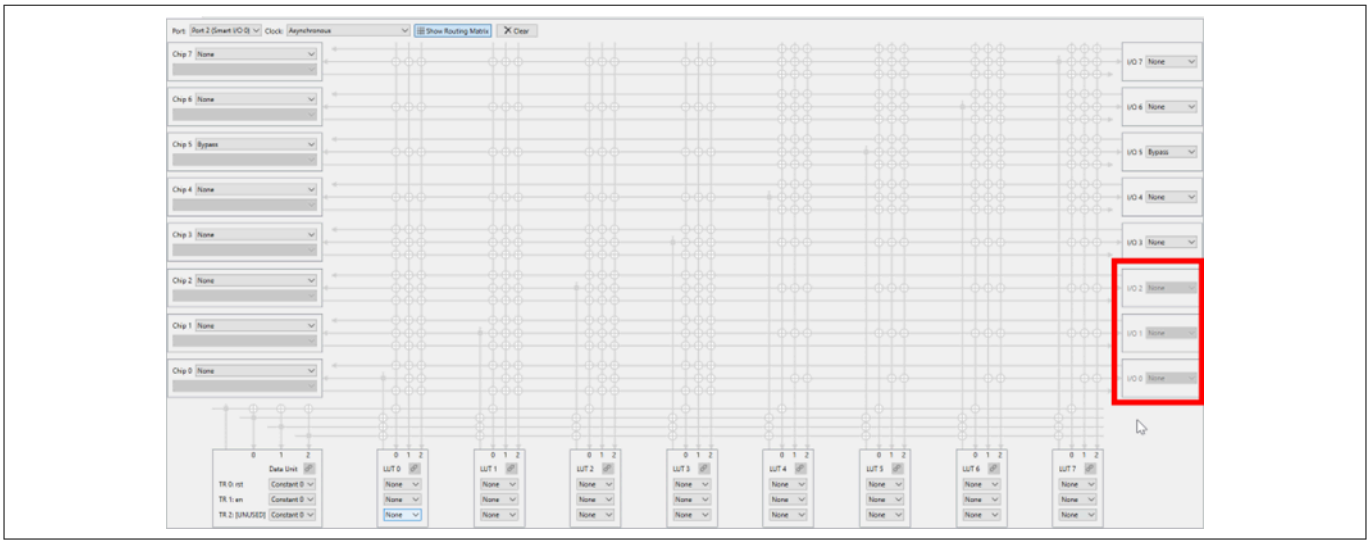

Figure 51 Smart I/O configuration for unbounded pads

4.3 Firmware configurations

As previously discussed in this document, the internal PSOC™ blocks being used for inductive sense scan are:

1. Smart I/O – To configure as NOT gate and route signal internally to counter
2. Counter – To generate raw counts
3. Timer – To define scan window

4.3.1 Smart I/O block

The smart I/O block adds programmable logic to an I/O port. This programmable logic integrates board-level Boolean logic functionality such as AND, OR, and XOR into the port. PSOC™ 4700S Plus device supports smart I/O on three ports – Port 1, Port 2, and Port 3. Configure the smart I/O block with inverter operation for the pins to be used as inductive sensing.

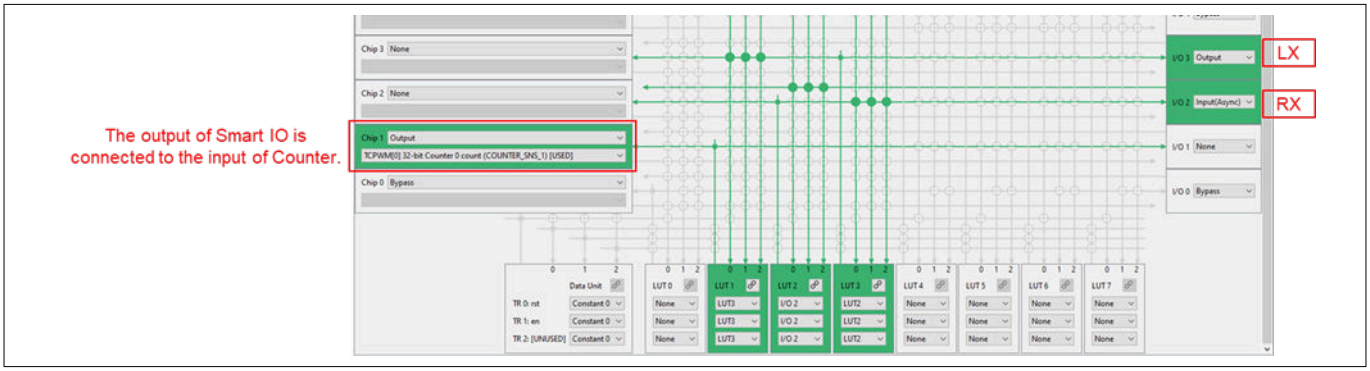

Figure 52 Smart I/O configuration

Figure 52 illustrates the smart I/O configuration. The configuration is as follows:

- I/O 2 is designated as an input pin (Rx), receiving the input signal
- I/O 3 is configured as an output pin (LX), transmitting the output signal
- LUT2 functions as an inverter, taking the input signal from the Rx pin and inverting it
- The output of LUT2 is connected to LUT3, which acts as a buffer
- The output of LUT3 is connected to the LX pin, as well as to LUT1
- LUT1 is configured to route the signal to the internal counter block, specifically to the count input terminal

Signal flow and processing

In this configuration, the input signal is received by I/O 2 and inverted by LUT2. The inverted signal is then buffered by LUT3 and transmitted to the LX pin. Simultaneously, the signal is routed to LUT1, which directs it to the internal counter block for counting edges of input signal.

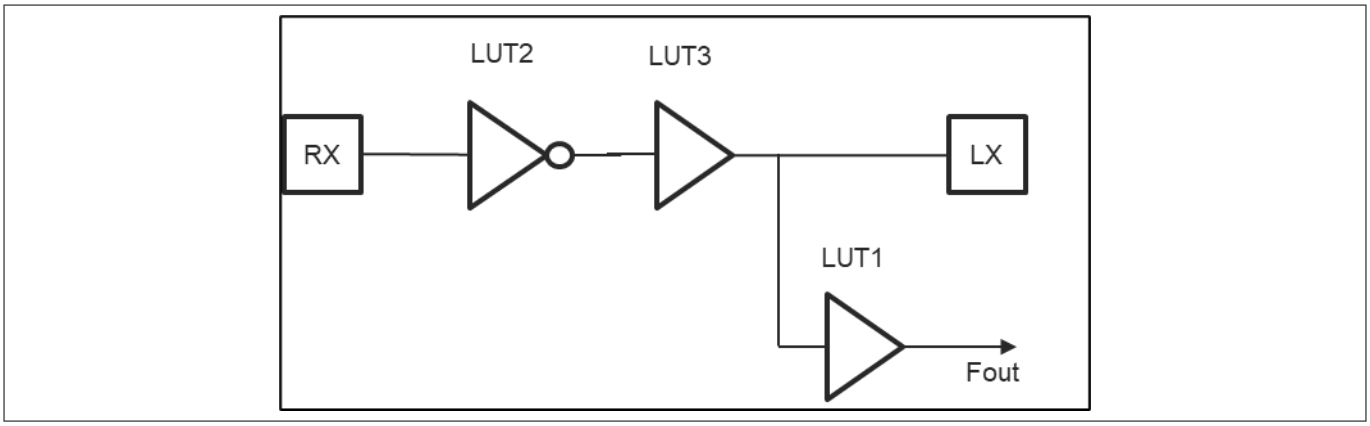

Figure 53 LUT configuration block level

Each LUT configuration with their bit mapping is shown in Figure 53.

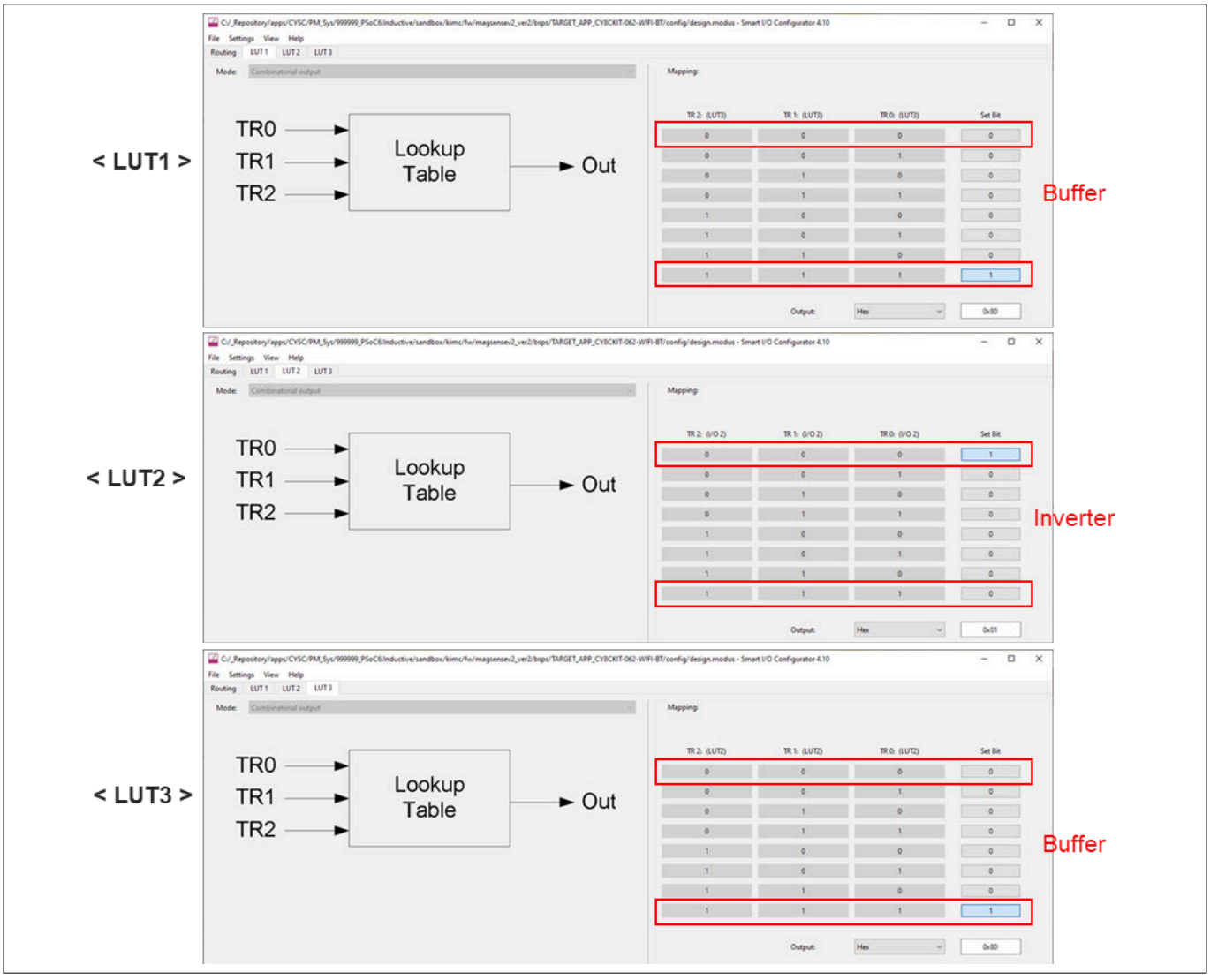

Figure 54 LUT configuration

4.3.2 LC oscillator

A basic pierce CMOS oscillator is formed using the inductance (L1) of a PCB coil along with two capacitors (C1 and C2) connected to ground across the inductor and forms a free running oscillator along with an inverter which is placed between the two pins using the smart I/O block.

4.3.3 Counter

To detect frequency changes, the oscillator output is fed into a counter that increments on each edge received. The raw count of the counter is proportional to the frequency of the LC oscillator. The counter is implemented using the TCPWM in counter mode with the counter incrementing on both edges.

Example configuration for counter block is depicted in Figure 55.

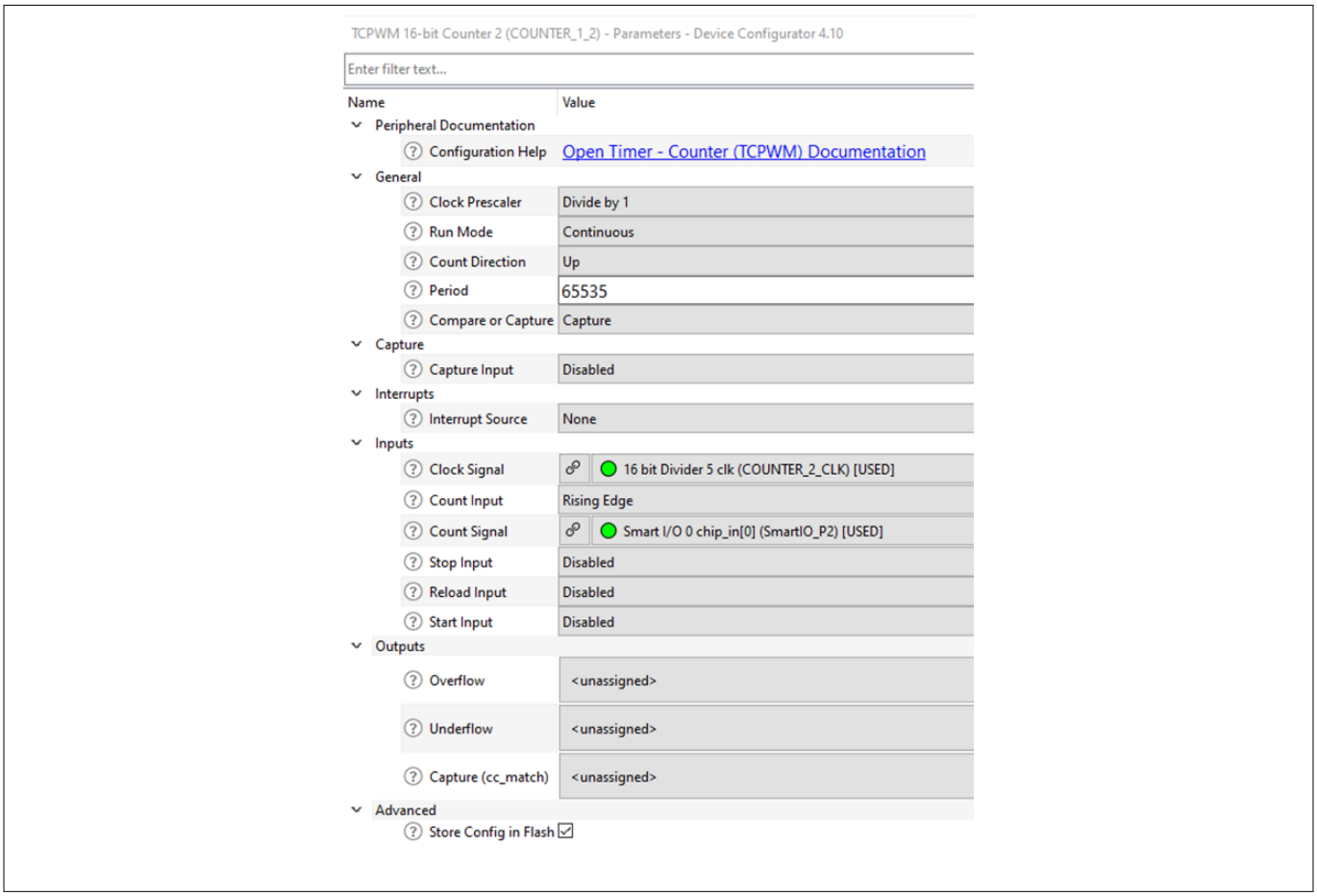

Figure 55 Counter block configuration in ModusToolbox™

To ensure accurate counting and prevent saturation, the counter block period should be set to its maximum value. This allows the counter to count the highest frequency signals within the scan window time frame without becoming saturated.

If the counter still becomes saturated even after setting the period to its maximum value (65535), it is necessary to reduce the scan time or reduce the oscillator frequency. This adjustment will help prevent the counter from reaching its maximum capacity too quickly, ensuring that it can accurately count the input signals.

The count signal of the counter block is driven by the smart I/O inverter output. The counter value increments based on the number of input raise pulses received. Specifically:

- Each time a raise pulse is detected, the counter value increases by one
- The smart I/O inverter along with Inductor coil and capacitance forms oscillator circuit whose output generates input signal, which is then counted by the counter block

By configuring the counter block in this way, it is possible to accurately measure the frequency of the input signals and prevent counter saturation, ensuring reliable and accurate results.

The raw counts generated by the counter block can be estimated with the following equations:

- When count input is set to rising falling edge:

$$\text{raw count} = \text{scan window} \times f_{\text{out}} \tag{10}$$

- When count input is set to both or either sides:

$$\text{raw count} = \text{scan window} \times f_{\text{out}} \times 2 \tag{11}$$

4.3.4 Timer

A timer is used to set the scan window during which the counter counts which controls the sample rate and resolution of the result. This timer can be implemented as a TCPWM or as a fixed number of wait cycles of the CPU.

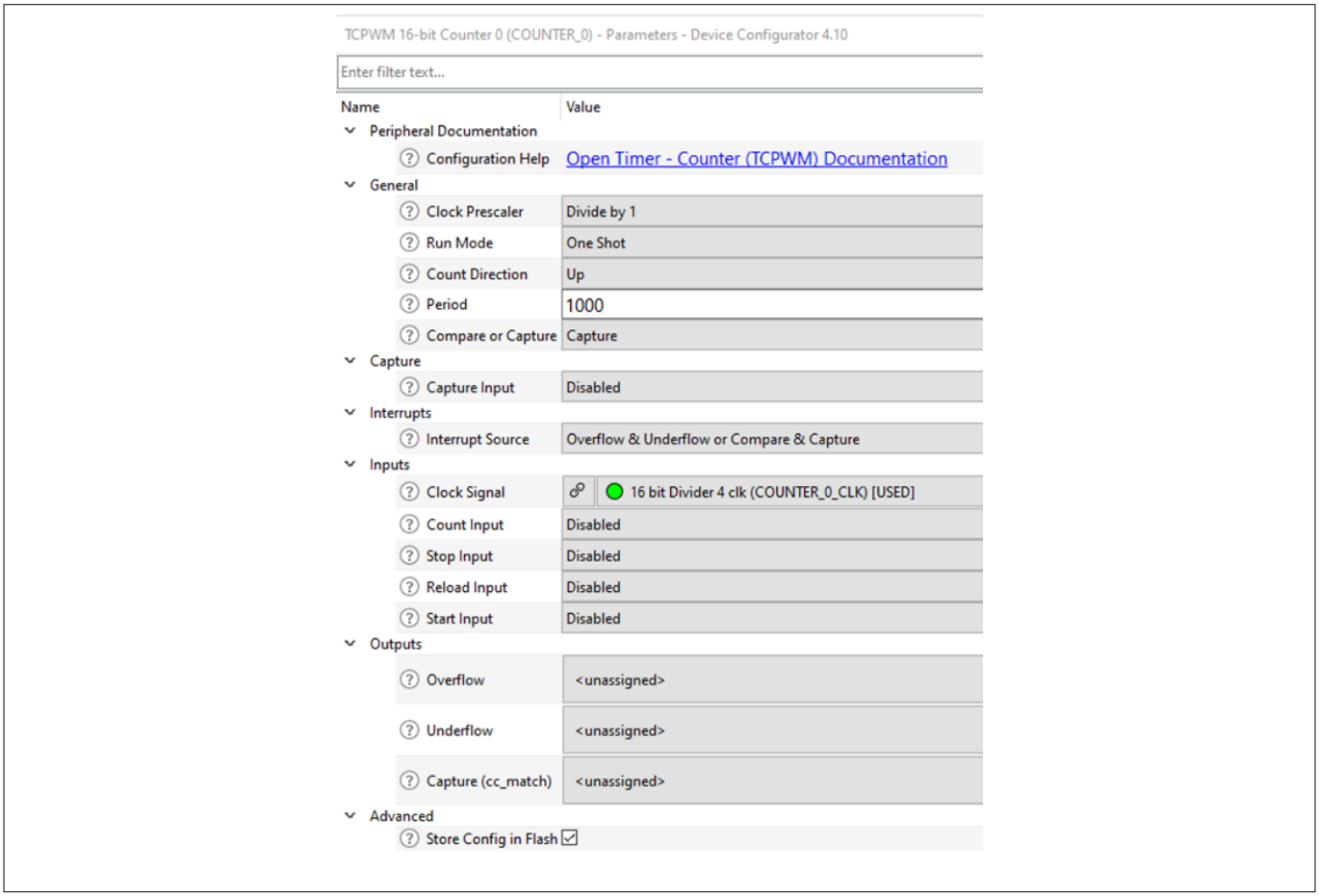

Figure 56 Timer block configuration in ModusToolbox™ for scan window generation

The timer block period value is set based on the required scan time, which determines the duration of the scan window. The combination of the period value and the clock frequency of the timer block defines the scan window, ensuring that the inductive sensor is scanned for a precise amount of time.

The timer block generates a terminal count (TC) interrupt signal when the configured period (scan window) is reached. This interrupt signal indicates the end of the scan window. The inductive sensor counter is started

simultaneously with the timer trigger start, allowing it to count the input signals during the scan window. When the timer block elapses and reaches the period value, a TC interrupt is raised, signaling the end of the scan window. At this point, the counter value can be read to determine the frequency of the input oscillator circuit. The counter value represents the number of input signals received during the scan window, providing a direct measure of the oscillator frequency.

Inductive scan process:

1. Configure the timer block period value based on the required scan time
2. Start the inductive sensor counter along with the timer trigger start
3. Wait for the timer block to elapse and reach the period value
4. Read the counter value when the TC interrupt is raised, indicating the end of the scan window
5. Use the counter value to determine the frequency of the input oscillator circuit

4.4 Firmware flow

Following is the typical firmware flow for an inductive sense application.

4 Firmware implementation

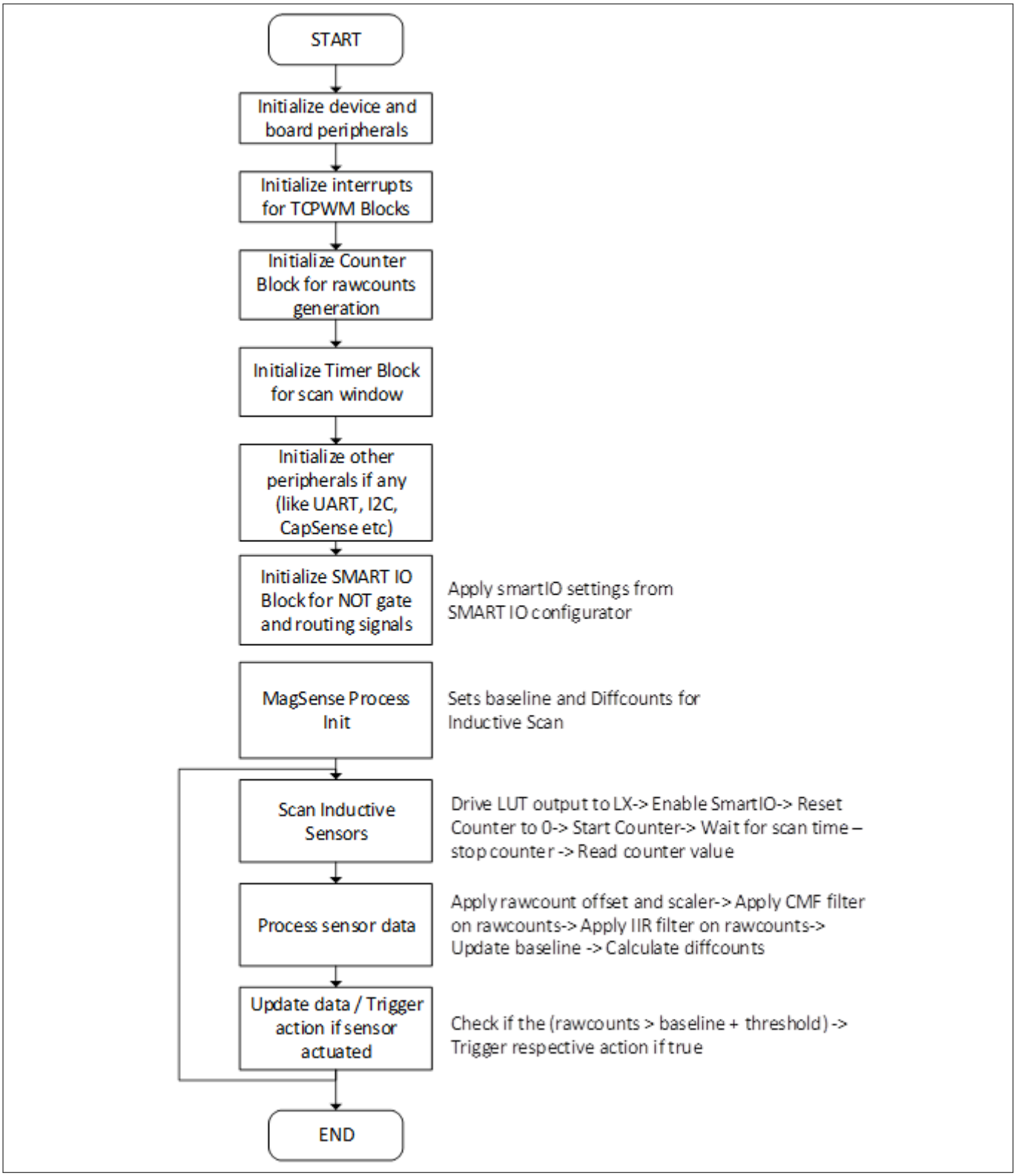

Figure 57 Flowchart of firmware flow

Inductive sensor scanning can be performed in two methods:

- Sequential scanning
- Parallel scanning

4.5 Sequential scanning

Sequential scanning reduces the complexity of the firmware and the CPU's power consumption by performing inductive sense scans on one sensor after another. Figure 58 details the firmware flow for sequential scanning where the sensor configuration and scanning are done one after the other, the sensor processing is done sequentially but once scan for all sensors is completed.

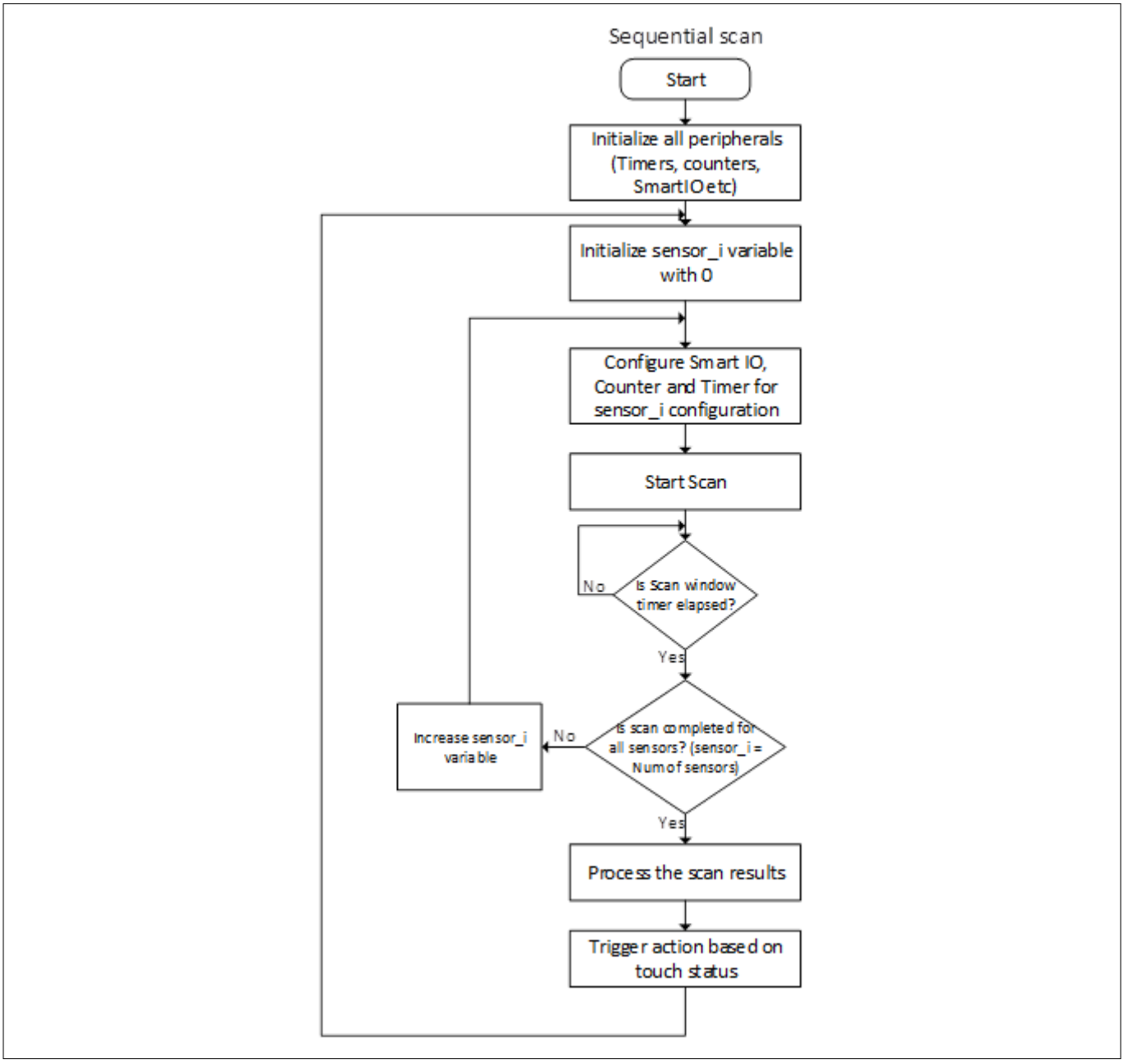

Figure 58 Sequential inductive scan

4.6 Parallel scanning

Parallel scanning method performs inductive sense scan of multiple sensors at the same time so reducing the effective scan time and faster inductive sense operation.

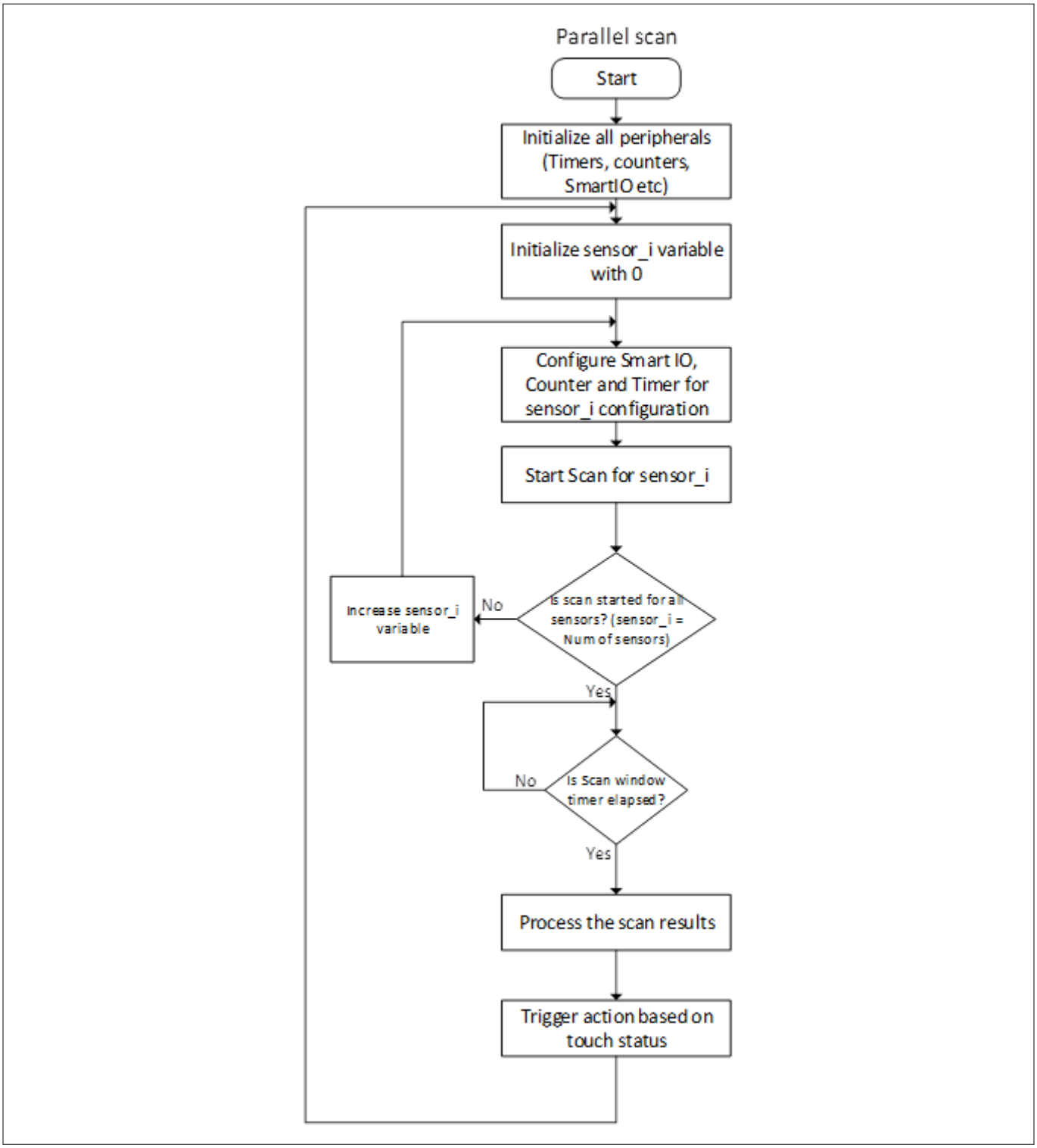

Figure 59 Parallel inductive scanning

5 Hybrid inductive and capacitive sensing on same sensor

This chapter presents a novel configuration that enables the scanning of a single sensor coil using both inductive sensing technology and capacitive sensing technology. By integrating these two sensing technologies, this hybrid approach leverages the advantages of each, providing a more comprehensive and versatile sensing solution.

The unique hybrid sensing configuration allows for the detection of both soft touch and force touch. Specifically:

- Capacitive sensing (CAPSENSE™) enables the detection of soft touch, providing a sensitive and responsive interface for user input
- Inductive sensing, on the other hand, allows for the detection of force touch, enabling the measurement of applied force or pressure

By combining these two sensing technologies, the hybrid sensing approach offers a more robust and flexible solution for a wide range of applications, including user interface design, gesture recognition, and more.

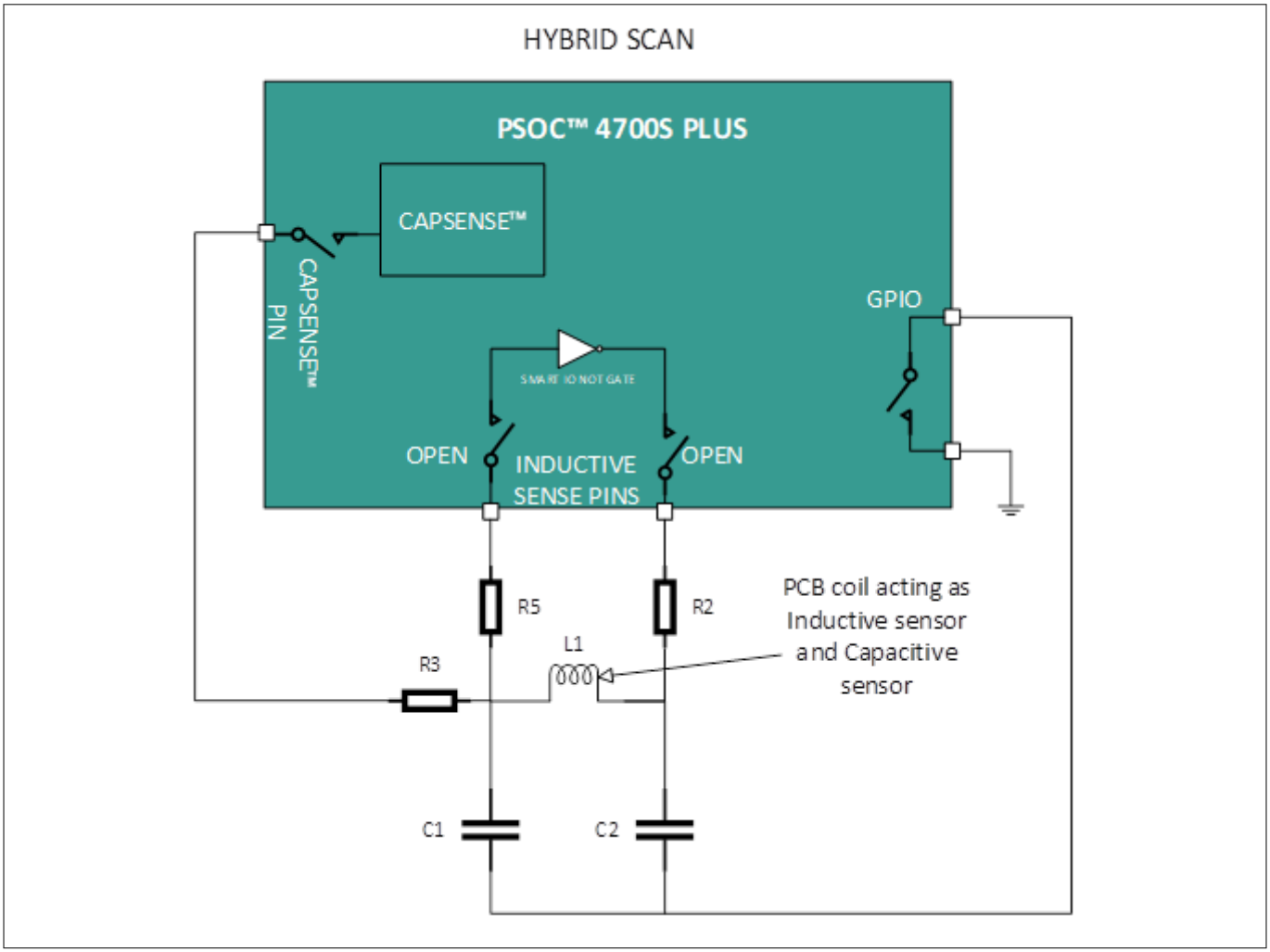

Figure 60 Hybrid sensing scheme

The above image shows the connection diagram for a hybrid scan setup, using the same sensor coil for both inductive and capacitive scanning. This configuration uses four pins — two for inductive scanning, one for capacitive scanning, and an additional GPIO pin. The GPIO pin serves a dual purpose, isolating capacitors (C1 and C2) during CAPSENSE™ scan mode and connecting to ground during inductive scan mode.

This hybrid scan configuration enables the scanning of the same PCB-etched inductive coil for both CAPSENSE™ and inductive sensing, one at a time. The versatility of this setup makes it suitable for various applications, such as:

Truck open/close detection using inductive scanning, while ensuring that no fingers are present during closure using CAPSENSE™.

Door open/close detection, with the added safety feature of detecting human fingers in between.

A detailed explanation of the switch configurations and current flow diagrams for both scan modes will be provided below, offering a comprehensive understanding of the hybrid scan setup.

5.1 CAPSENSE™ scan mode

The below image depicts the configuration for performing a CAPSENSE™ scan. The green color and orange color lines show the signal flow path, the following settings are applied in CAPSENSE™ mode:

The inductive sense pins are set to high impedance (High Z) mode, effectively configuring them as open circuits.

The GPIO pin connected to capacitors C1 and C2 is also set to high impedance (High Z) mode, ensuring that it does not interfere with the CAPSENSE™ scan.

To facilitate the CAPSENSE™ scan, the CAPSENSE™ GPIO pin is connected to the CAPSENSE™ block. This connection enables the signal to flow from the CAPSENSE™ block, through the GPIO pin, to resistor R3, and ultimately to the PCB-etched coil.

Notably, the signal does not flow towards resistors R7 and R2 or capacitors C1 and C2, due to the open circuit configuration of the GPIO pins at the PSOC™. This isolation is crucial, as it allows for the detection of CAPSENSE™ touch using the inductive coil sensor. By preventing the signal from flowing through the inductive sensing circuitry, the CAPSENSE™ scan can be performed independently and accurately.

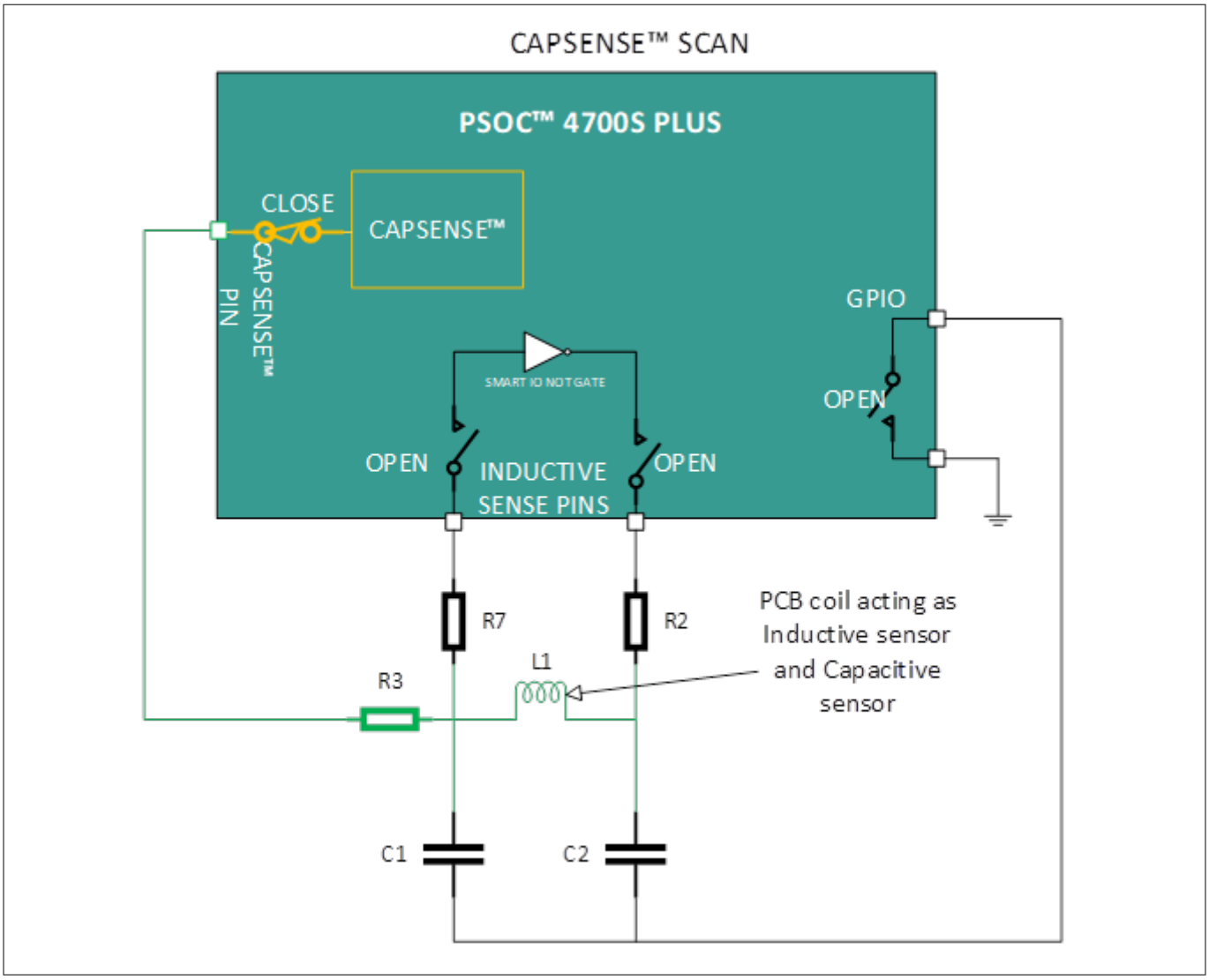

Figure 61 CAPSENSE™ scanning mode

5.2 Inductive scan mode

Figure 62 displays the configuration for performing an inductive scan. The green color and orange color lines show the signal flow path, the following settings are applied in Inductive scan mode.

The CAPSENSE™ pins are set to high impedance (High Z) mode, effectively configuring them as open circuits. The GPIO pin connected to capacitors C1 and C2 is set to strong drive mode to GND, creating a short circuit that connects the C1 and C2 terminals to ground (GND).

To facilitate the inductive scan, the inductive sense GPIO pins are connected to the smart I/O block. This connection enables the signal to flow from the smart I/O block, through the output of the NOT gate, to resistor R2, and then through the PCB-etched inductive coil to resistor R7. The signal ultimately returns to the input of the NOT gate, creating a closed loop.

The capacitors (C1 and C2) are connected in a specific configuration, with one end connected to the inductive coil and the other end connected to ground (GND) through the GPIO pin. This configuration, combined with the NOT gate and the inductor, creates an oscillation circuit. The strong drive mode of the GPIO pin ensures a stable connection to ground, allowing the oscillations to occur. This oscillation circuit is essential for the inductive scan.

5 Hybrid inductive and capacitive sensing on same sensor

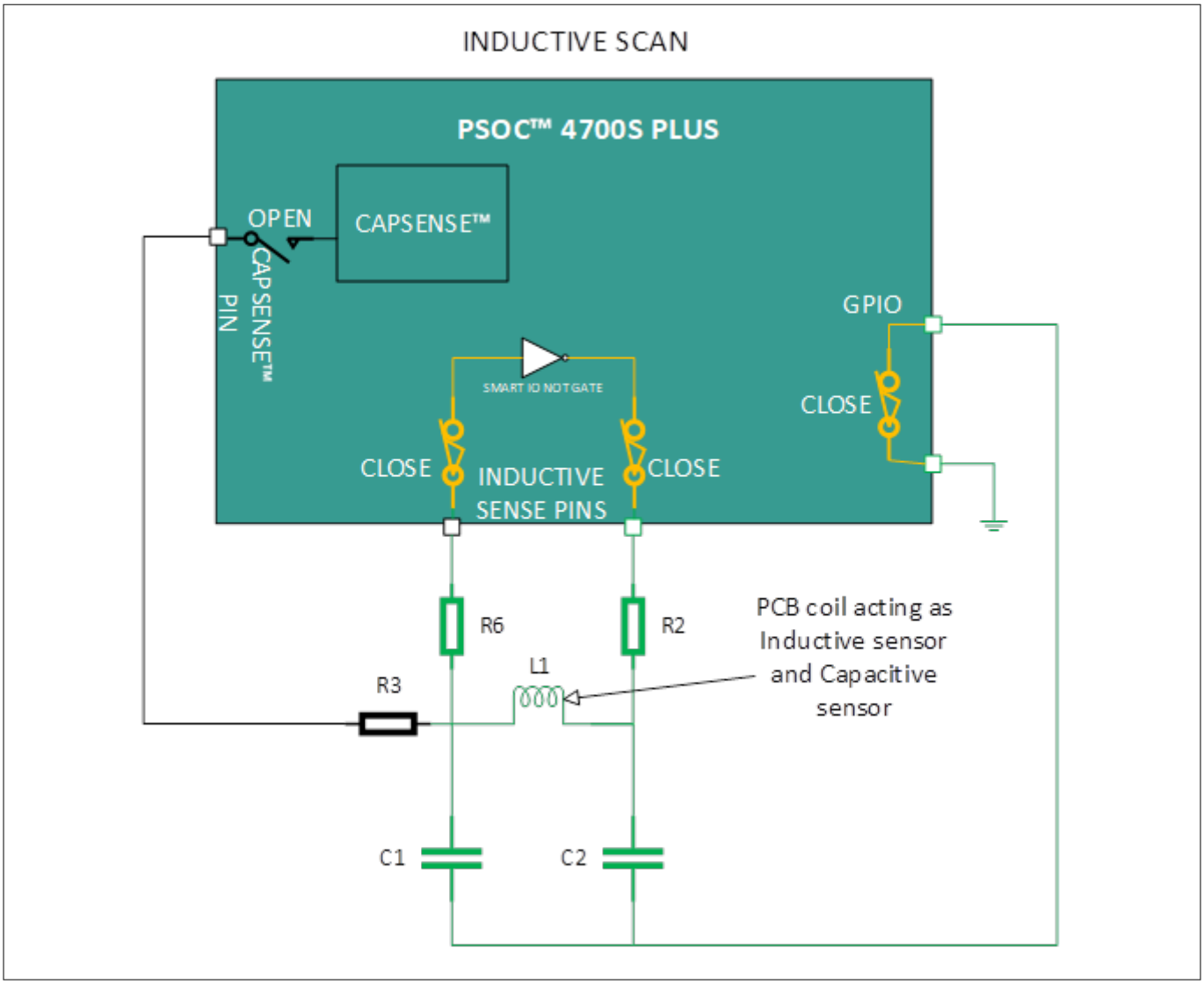

Figure 62 Inductive scan mode

6 CY8CKIT-4700S Plus EVK – Inductive sense evaluation kit

The kit includes one main board and a metal target.



Figure 63 Automotive PSOC™ 4700S Plus inductive sense kit

6.1 EVK features

The CY8CKIT-4700S-PLUS board contains the following:

- 40-QFN package of PSOC™ Automotive 4700S Plus microcontrollers
- Onboard debugger (KitProg)
- Three inductive sense buttons
- One metal proximity inductive sensor
- Seven sensor LEDs
- One user LED
- User buttons and shield connectors (Arduino, mikroBUS, XENSIV™ S2G

Figure 64 shows the kit features and blocks.

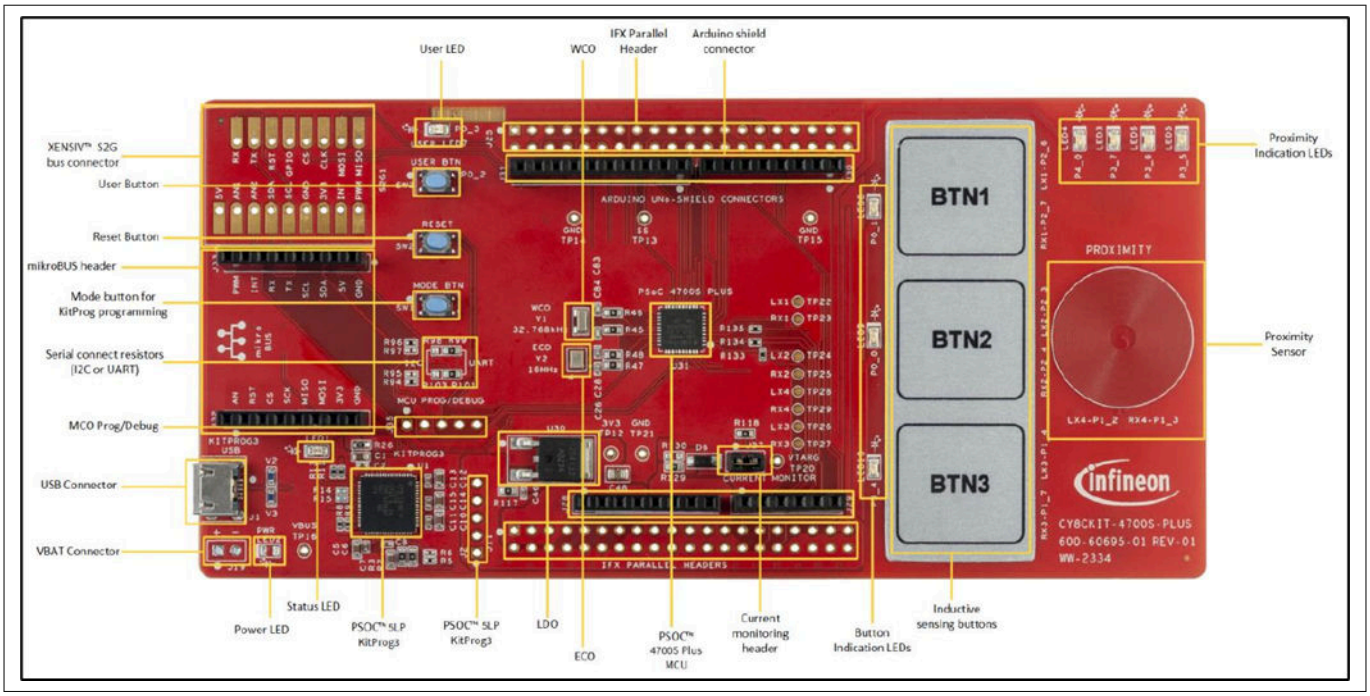

Figure 64 CY8CKIT-4700S-PLUS board with blocks marking

6.2 Block diagram

Figure 65 shows the CY8CKIT-4700S-PLUS kit block diagram.

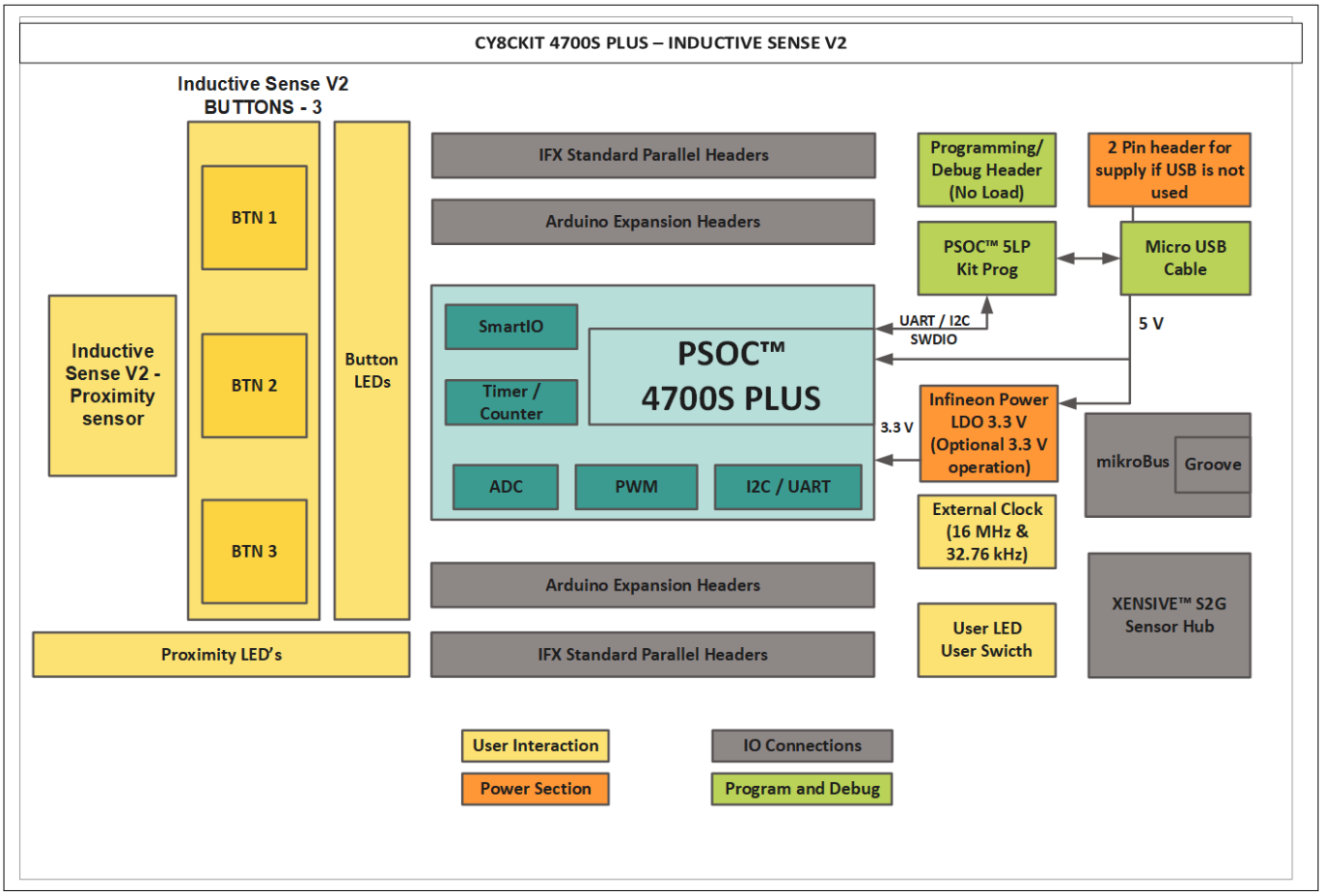

Figure 65 CY8CKIT-4700S PLUS block diagram

6.3 Getting started with EVK

The CY8CKIT-4700S-PLUS kit comes with a preinstalled firmware to check all the onboard peripherals.

6.3.1 Power up the lite kit

The CY8CKIT-4700S-PLUS kit can be powered from the USB port. To power up the lite kit:

1. Connect the Micro-USB cable between the evaluation kit and the host system

The same connection (KitProg3) also provides the programming and debugging over the CMSIS-DAP interface.

6.3.2 Hardware and tool setup

To check the preinstalled firmware on the CY8CKIT-4700S-PLUS kit, follow these steps to set up and communicate with the host system.

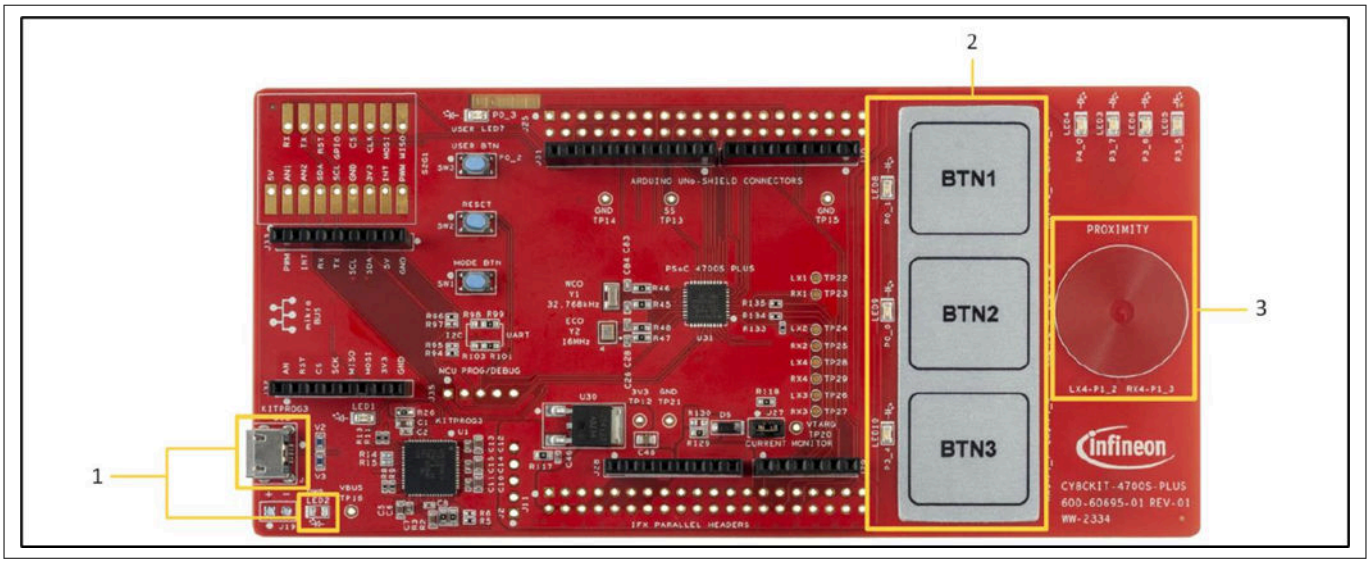

Figure 66 PSOC™ 4700 PLUS board peripherals marking

1. Connect the USB cable from the PC to the evaluation kit. The evaluation kit is powered by the PC via the USB cable (5 V). Ensure that the power LED2 (blue LED) is turned ON
2. When powered on, the PSOC™ 4700S Plus device starts executing the preinstalled firmware, which can be confirmed by touching the inductive sense buttons and observe the respective LED glows
3. Confirm by using the metal target near the proximity sensor and observe the proximity LEDs glowing as the metal target move towards and away from the sensor
4. To communicate with the PC, set up the serial terminal on the PC to send and receive messages to or from the evaluation kit. Follow these configurations in the Termite:
   - **Port:** COMx KitProg3 USB-UART (COMx)
   - **Baud rate:** 19200
   - **Data bits:** 8
   - **Stop bits:** 1
   - **Parity:** None
   - **Flow Control:** None

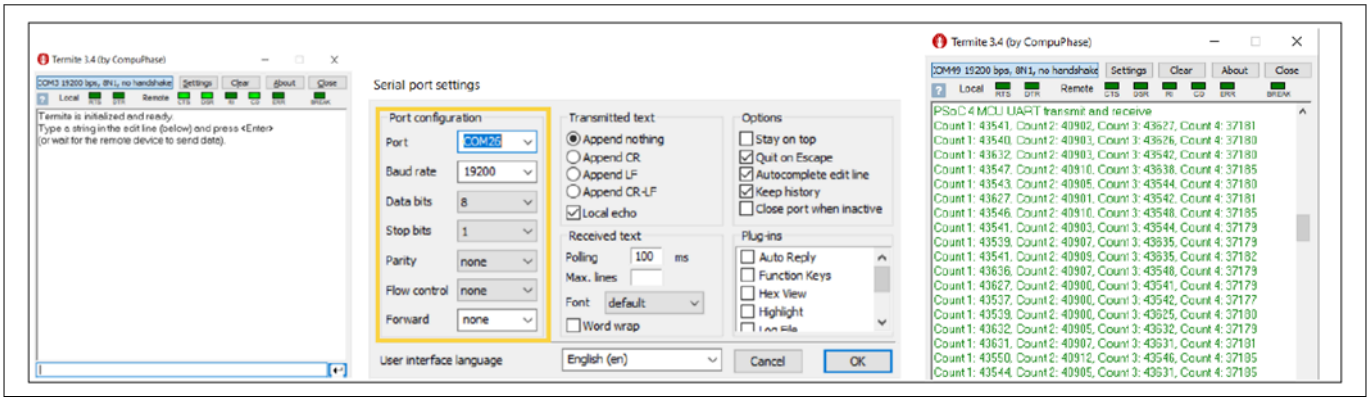

Figure 67 Termite configurations

6.3.3 Software checks

The evaluation kit comes with the preinstalled firmware. When turned ON, it starts executing. After completing the tool setup, follow these steps to check the firmware and lite kit features:

1. Reset the PSOC™ 4700S Plus device using the reset button (SW2)
2. Press the user button (SW3) to toggle the user LED7 (green LED)
3. Touch on any of the inductive sense buttons (BTN1, BTN2, BTN3) and verify using the onboard LEDs (LED8, LED9, and LED10)
4. Take the metal target near and farther from proximity coil to see the onboard LEDS (LED3, LED4, LED5, and LED6) turn on and off gradually
5. Monitor the UART (using the **Bridge Control Panel** graph window) to see the raw counts of all the four sensors. Observe that the row count increases when a touch is detected

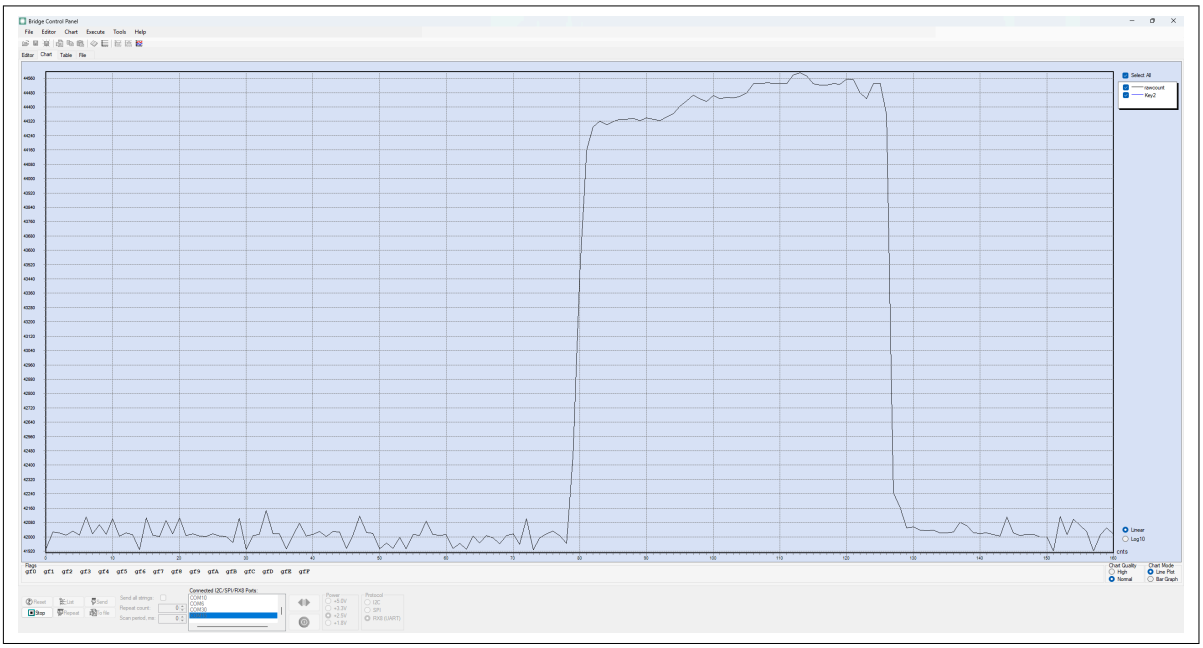

Figure 68 Bridge Control Panel graph window

6.3.4 PSOC™ 4700S Plus EVK user guide

To order the kit, visit the product webpage. For more information, refer CY8CKIT-4700S-PLU Evaluation Kit User guide.

6.4 Programming and debugging

6.4.1 Program and debug using ModusToolbox™

1. Create a new workspace in documents folder and copy the unzipped code example folder to the same

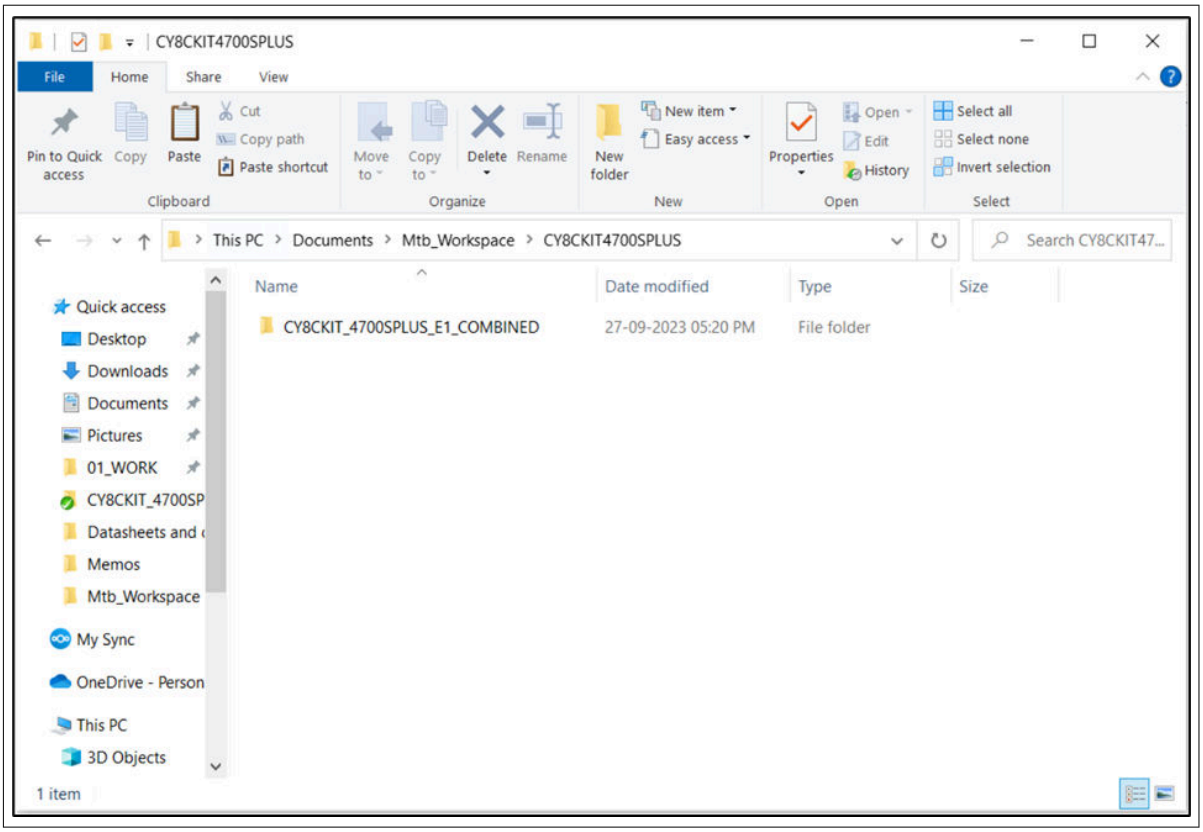

Figure 69 Creating workspace and copying code example folder

2. Open ModusToolbox™ (Eclipse IDE for ModusToolbox™ v3.3 or higher), browse and choose the created workspace from **Step 1** and launch

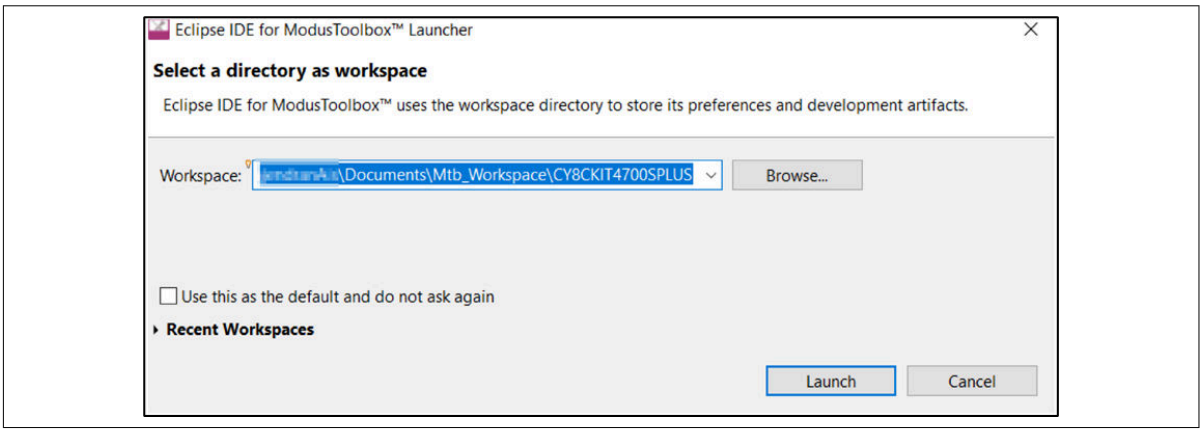

Figure 70 Launching the workspace

3. Import the project to ModusToolbox™ by navigating to **File** > **Import** > **General** > **Existing Projects** into workspace. Click **Next**, under **Select root directory**, click **Browse** and choose the copied code example folder

Check on the **Copy projects into workspace** checkbox and click **Finish**

6 CY8CKIT-4700S Plus EVK – Inductive sense evaluation kit

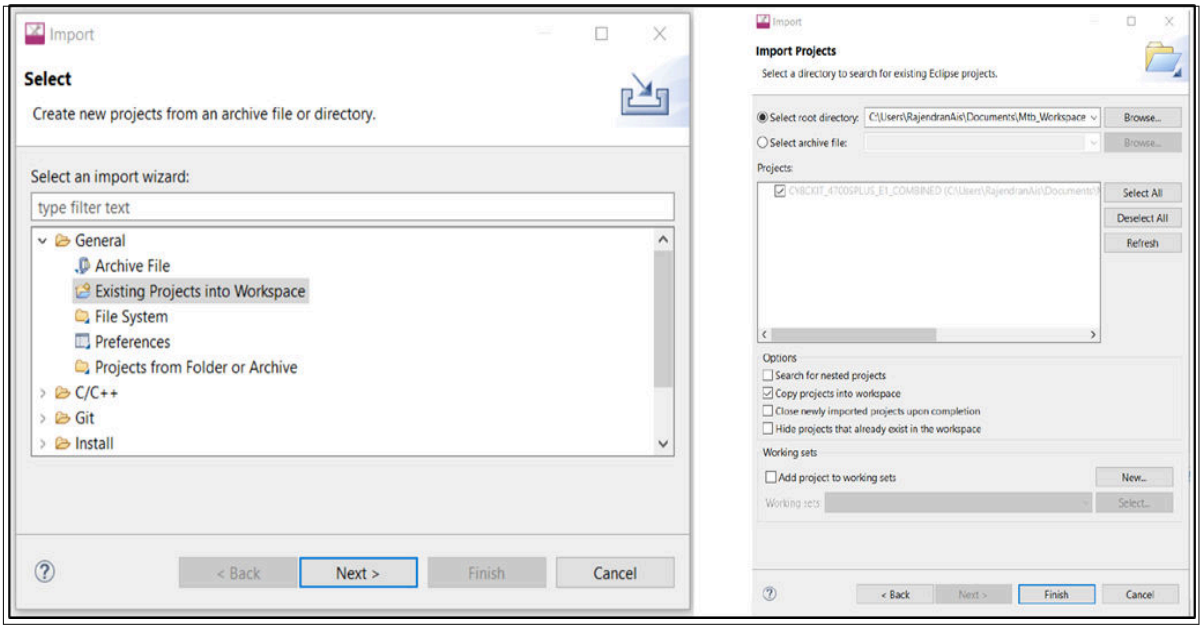

Figure 71 Importing the project to ModusToolbox™

4. In terminal window, run the command **make getlibs** and wait for the importing to complete



Figure 72 Terminal window command

5. Select the project in the project explorer and build the application from the **Quick Panel**
6. Connect the board to the PC using the given USB connector
7. Run the application by selecting **Project_Name Program (KitProg3_MiniProg4)** under **Launches** in the **Quick Panel**

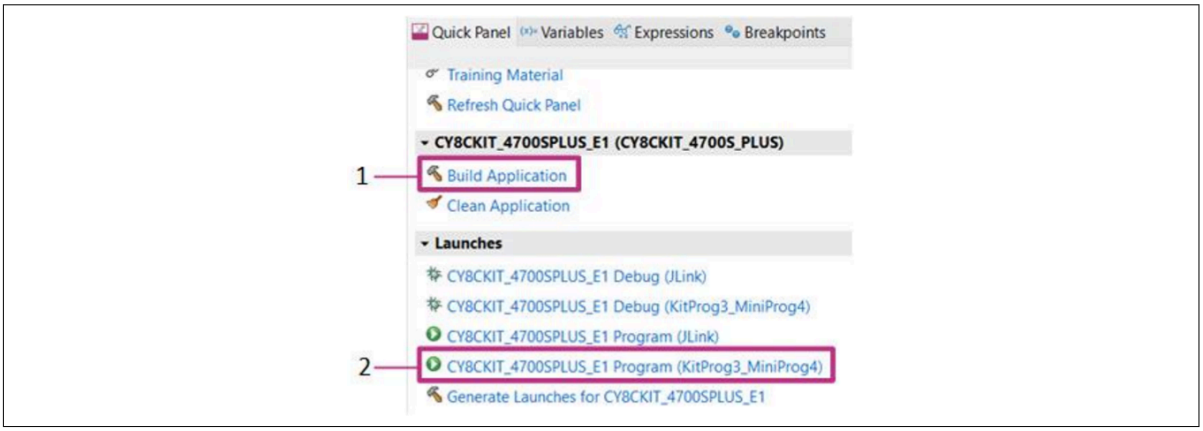

Figure 73 Option to Run and build the application

8. Ensure that the project name is mentioned correctly; otherwise, generate the launches and then run the program

9. The user LED (LED7) toggles on each press of the user button (SW3). When a metal target is brought near the inductive sense buttons (BTN1, BTN2, BTN3), the respective LED (LED8, LED9, LED10) illuminates, allowing the proximity sensing functionality to be observed
10. Open **Bridge Control Panel** and set the following:
    a. **Mode:** UART
    b. **COM port:** Kit_Prog port
    c. **Baud rate:** 19200

    The following image shows the raw counts graph for the sensor in the **Bridge Control Panel** software.

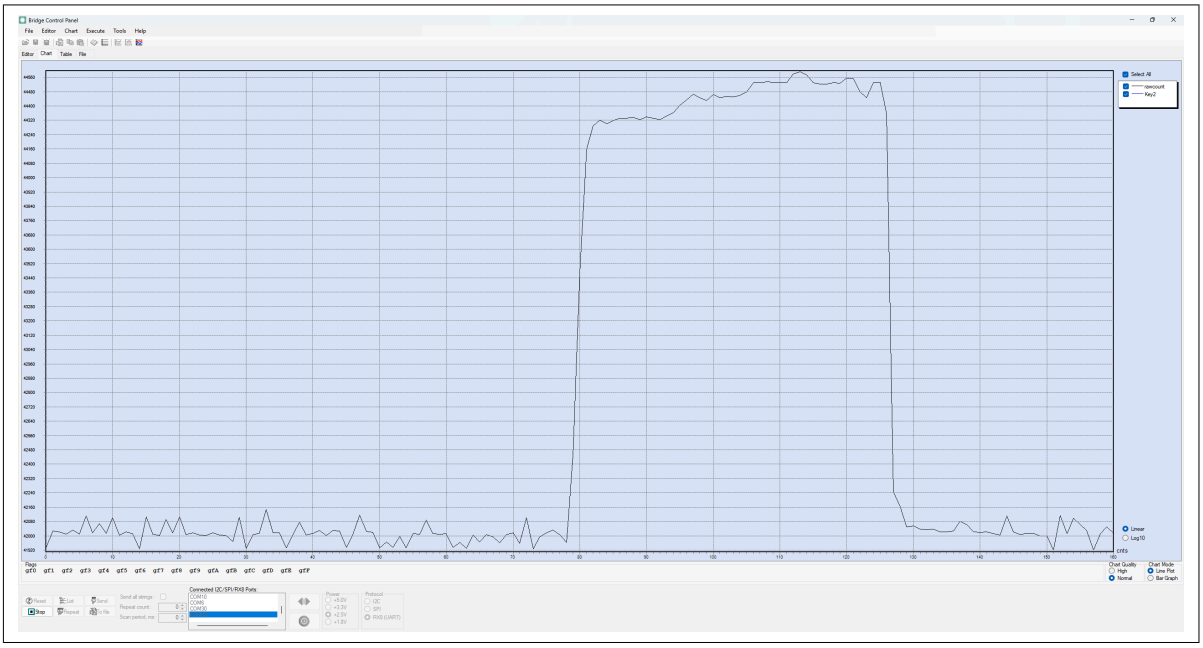

Figure 74 Bridge Control Panel output

***Note**: The mtb_shared folder will be present in the ModusToolbox™_workspace folder and can be copied to the IDE is required. However, it is not mandatory to import it.*

References

[1] Infineon Technologies AG: *AN239751 - Flyback inductive sensing design guide*; Available online

[2] Infineon Technologies AG: *PSOC™ Automotive 4700S Plus webpage*; Available online

Revision history

Document revision	Date	Description of changes
**	2025-11-19	Initial release

Trademarks

PSOC™, formerly known as PSoC™, is a trademark of Infineon Technologies. Any references to PSoC™ in this document or others shall be deemed to refer to PSOC™.

Trademarks

All referenced product or service names and trademarks are the property of their respective owners.

Edition 2025-11-19

Published by

Infineon Technologies AG

81726 Munich, Germany

© 2025 Infineon Technologies AG

All Rights Reserved.

Do you have a question about any aspect of this document?

Email: erratum@infineon.com

Document reference
IFX-lzj1755502953691

Important notice

The information contained in this application note is given as a hint for the implementation of the product only and shall in no event be regarded as a description or warranty of a certain functionality, condition or quality of the product. Before implementation of the product, the recipient of this application note must verify any function and other technical information given herein in the real application. Infineon Technologies hereby disclaims any and all warranties and liabilities of any kind (including without limitation warranties of non-infringement of intellectual property rights of any third party) with respect to any and all information given in this application note.

The data contained in this document is exclusively intended for technically trained staff. It is the responsibility of customer's technical departments to evaluate the suitability of the product for the intended application and the completeness of the product information given in this document with respect to such application.

Warnings

Due to technical requirements products may contain dangerous substances. For information on the types in question please contact your nearest Infineon Technologies office.

Except as otherwise explicitly approved by Infineon Technologies in a written document signed by authorized representatives of Infineon Technologies, Infineon Technologies' products may not be used in any applications where a failure of the product or any consequences of the use thereof can reasonably be expected to result in personal injury.