

EiceDRIVER™ 1EDI3050AS & 1EDI3033AS high-voltage gate driver ICs for HV eFuse & eDisconnect & pre-charge applications

Infineon Technologies | Automotive

February 2024

restricted

Introduction EiceDRIVER™ high-voltage gate driver ICs for EV applications

Outstanding drive solutions for various high-voltage applications

Traction inverter

Traction inverter
External excitation
EESM

HV auxiliaries
Heater, pumps, etc.

DC/DC
12 V / HV, 400 V / 800V

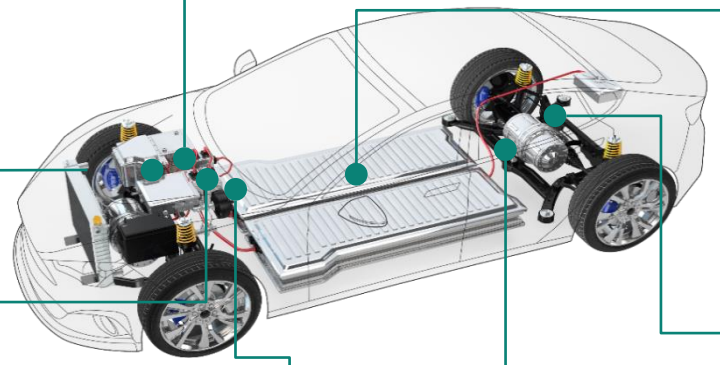

Topic of this presentation

Battery eFuse / eDisconnect

On-board charger

Fuel cell compressor

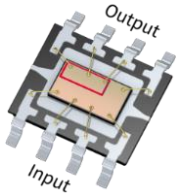

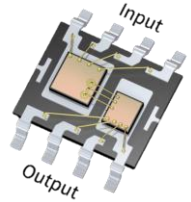

Copyright © Infineon Technologies AG 2024. All rights reserved.

Automotive HV eFuse and HV eDisconnect
Applications and possible locations

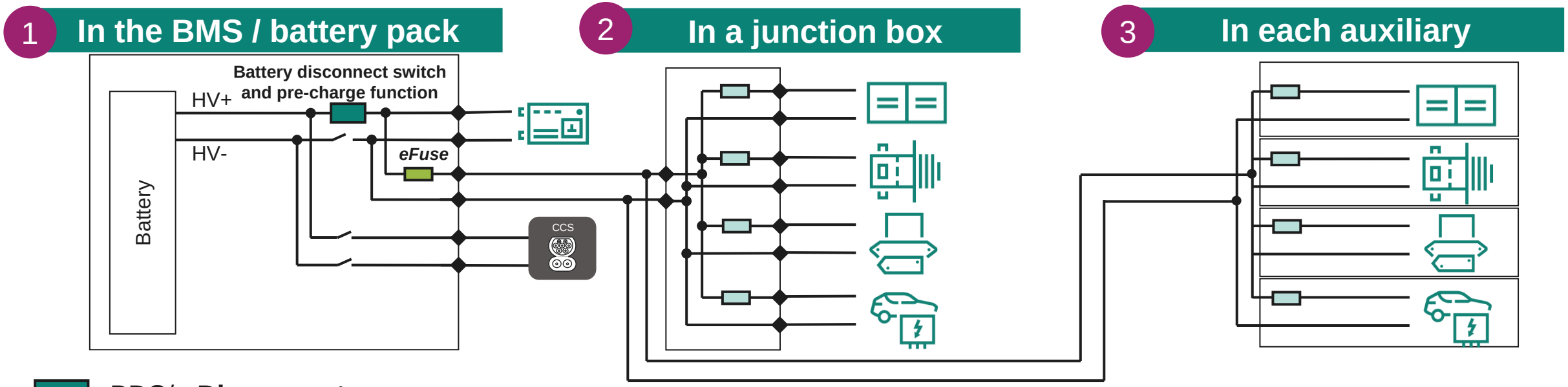

BDS/ **eDisconnect**

Central **eFuse** for auxiliaries Distributed auxiliary **eFuse**

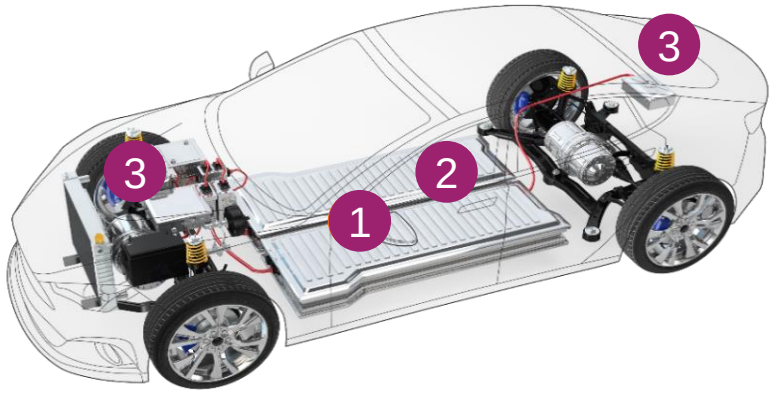

The HV eFuse can be placed in different locations:

- Central or distributed eFuse inside the BMS (most common today)
- In a junction box
- Directly at each auxiliary

Copyright © Infineon Technologies AG 2024. All rights reserved.

A semiconductor-based fuse and relay solution offers increased safety, reliability and flexibility as well as shorter reaction times

eFuse, eDisconnector and **solid-state relays** enables a **FASTER, SAFER, more reliable and flexible** protection for HV applications of xEVs

Reaction

- Fast switch-off < **1us**
- Pyro-fuse > 100s us
- ~1ms for melting-fuse

Safety

- System monitoring and protection
- Configurable recovery

Reliability

- No stress degradation
- No contact bounce and pitting
- Arching free

Flexibility

- 400 V & 800 V systems
- Configurable current profiles

From state-of-the-art fuses & relays to… power semiconductor switches to… proof-of-concept evaluation boards



Copyright © Infineon Technologies AG 2024. All rights reserved.

EiceDRIVER™ 1EDI3050AS & 1EDI3033AS fitting well to HV eFuse & eDisconnect & pre-charge applications

Overview

- Highest integration & space saving as one device combining
  - **Strong driving (peak up to 20A), isolation, isolated DC/DC (1EDI3050AS only), isolated ADC for current or voltage sensing**
  - **ISO 26262 ASIL B-compliant monitoring** incl. supply monitoring, gate & output stage monitoring, over current protection and fast switch off (<1us). Plus, optional redundant over current detection via DESAT
  - Either pre-configured (1EDI3033AS) or full flexibly via SPI (1EDI3050AS)

1EDI3033AS block diagram

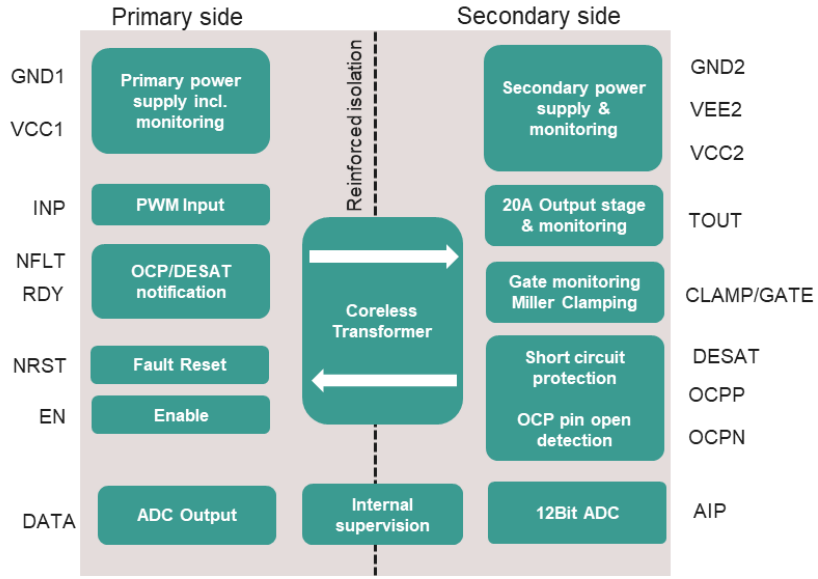

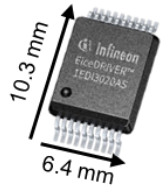

DSO-20 (10.3mm x 6.6mm)

1EDI3050AS block diagram

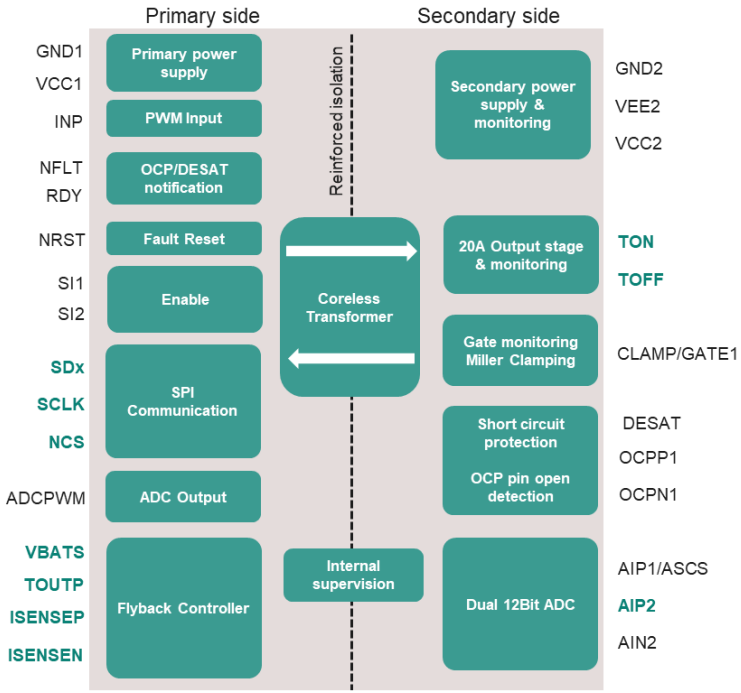

Additional features:
- 2nd ADC input
- Flyback Controller
- SPI configurability
- Separated Ton/Toff

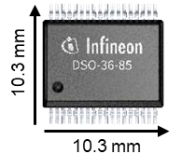

DSO-36 (10.3mm x 10.3mm)

Leanest ISO 26262-compliant driver on the market

Copyright © Infineon Technologies AG 2024. All rights reserved.

1EDI3033AS vs. 1EDI3050AS
Product overview

	1EDI3033AS	1EDI3050AS
Isolation & CMTI	Reinforced 6.8kV, CMTI >150V/ns	Reinforced 6.8kV, CMTI >150V/ns
Interface	Pins & PWM data stream	Pins & **SPI**
Power technology	Optimized for SiC	Can be optimized for SiC via SPI
Drive stage strength	20A	20A
Drive Stage	TOUT (ext. diode to separate Ron & Roff)	Split Output (TON & TOFF)
Active miller clamp	Yes, internal	Yes, internal and external
SC detection	DESAT & differential OCP	DESAT & differential OCP
SC reaction	internal softoff ramp	Internal softoff ramp
ISO-26262 compliant	Yes, ASIL B	Yes, ASIL B
Additional safety features	Gate & output stage monitoring Supply monitoring (VCC1/VCC2/VEE2) Internal primary to secondary supervision Internal supply rail monitoring	Gate & output stage monitoring Supply monitoring (VCC1/VCC2/VEE2) Internal primary to secondary supervision Internal supply rail monitoring
Integrated flyback	No	**Yes, with 2% accuracy**
ADC	Yes, one 12-Bit DS-ADC, 1 ext. channel	Yes, one 12-Bit DS- ADC, **multiplexed to 2 ext. Channels.**
Package	DSO-20 (10.3mm x 6.4mm)	DSO-36 (10.3mm x 10.3mm)

- **1EDI3050AS** is the preferred solution if the accurate flyback controller and/or the 2nd ADC channel is needed
- If not, the **1EDI3033AS** is the leaner, board space optimized solution

Copyright © Infineon Technologies AG 2024. All rights reserved.

HV eFuse system overview using 1EDI3033AS in combination with Infineon CoolSiC™ and AURIX™

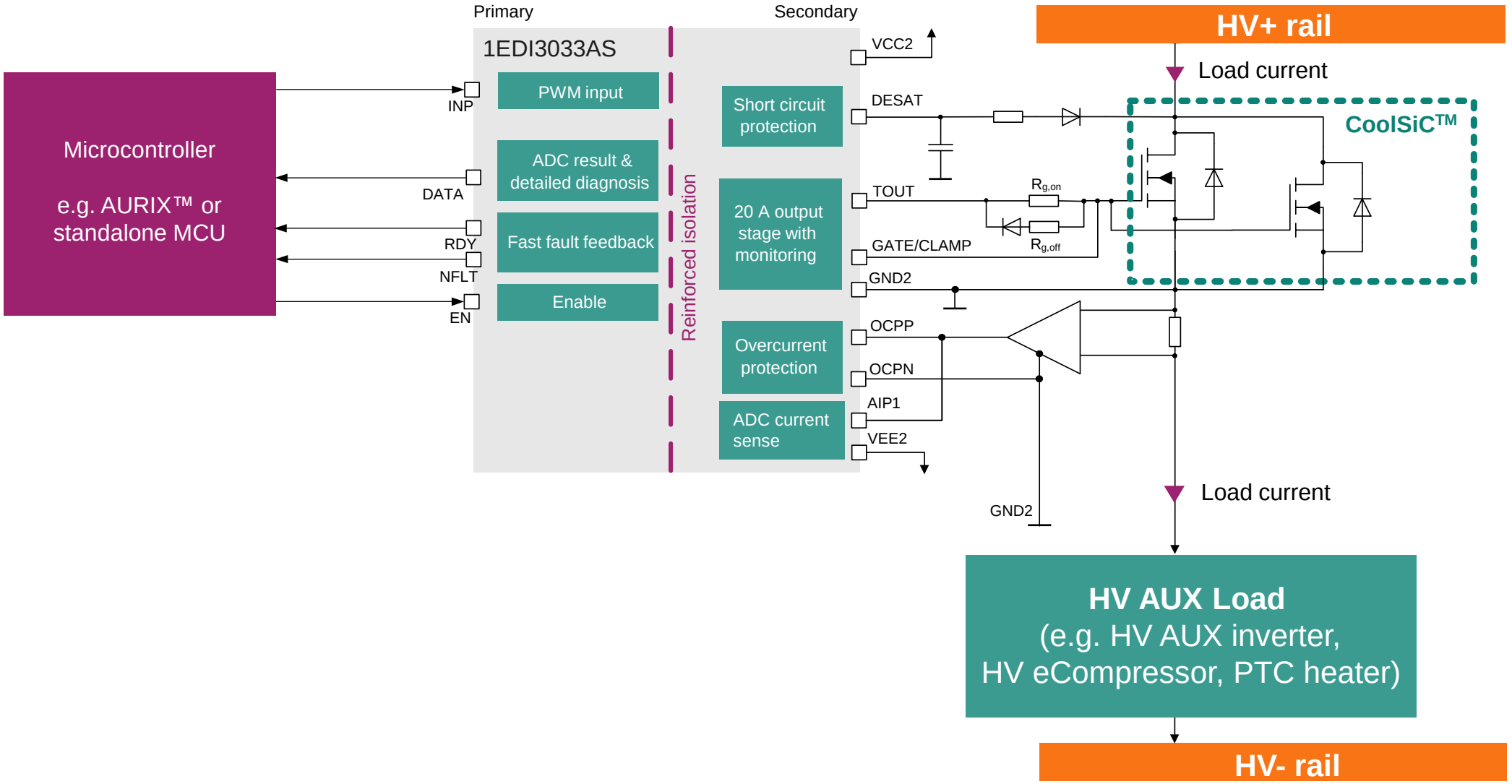

Copyright © Infineon Technologies AG 2024. All rights reserved.

EiceDRIVER™ 1EDI3033AS product highlights
Highest feature integration for cost effective designs

Key features



- ASIL B-compliant for easy system integration
- Reinforced isolation
- Driving the power devices
- Passive clamping if device is unpowered
- Primary & secondary supply monitoring
- Gate & output stage monitoring
- Fast over current detection via ext. shunt
- Redundant over current detection via DESAT (e.g. to reduce shunt FIT rates)
- Isolated 12-Bit DS-ADC for
- Current meas. via ext. CSA and shunt
- Or NTC measurement
- Or switch open measurement



Copyright © Infineon Technologies AG 2024. All rights reserved.

Support
EiceDRIVER™ 1EDI3033AS

Technical documents	Status
Datasheet	available
Application note	available
Safety documentation*	available

Evaluation Board	Status
1EDI303XAS EVALBOARD	available
1EDI303XAS Evaluation Board Schematics	available
1EDI303XAS Evaluation Board Altium Files	available

Design and simulation tools	Status
Simulation models	available
Infineon Designer online simulation	available

Check out the webpage for
further information and design support:
www.infineon.com/eicedriver-xEV

* NDA restrictions

Copyright © Infineon Technologies AG 2024. All rights reserved.

HV eFuse system overview using 1EDI3050AS in combination with Infineon CoolSiC™ and AURIX™

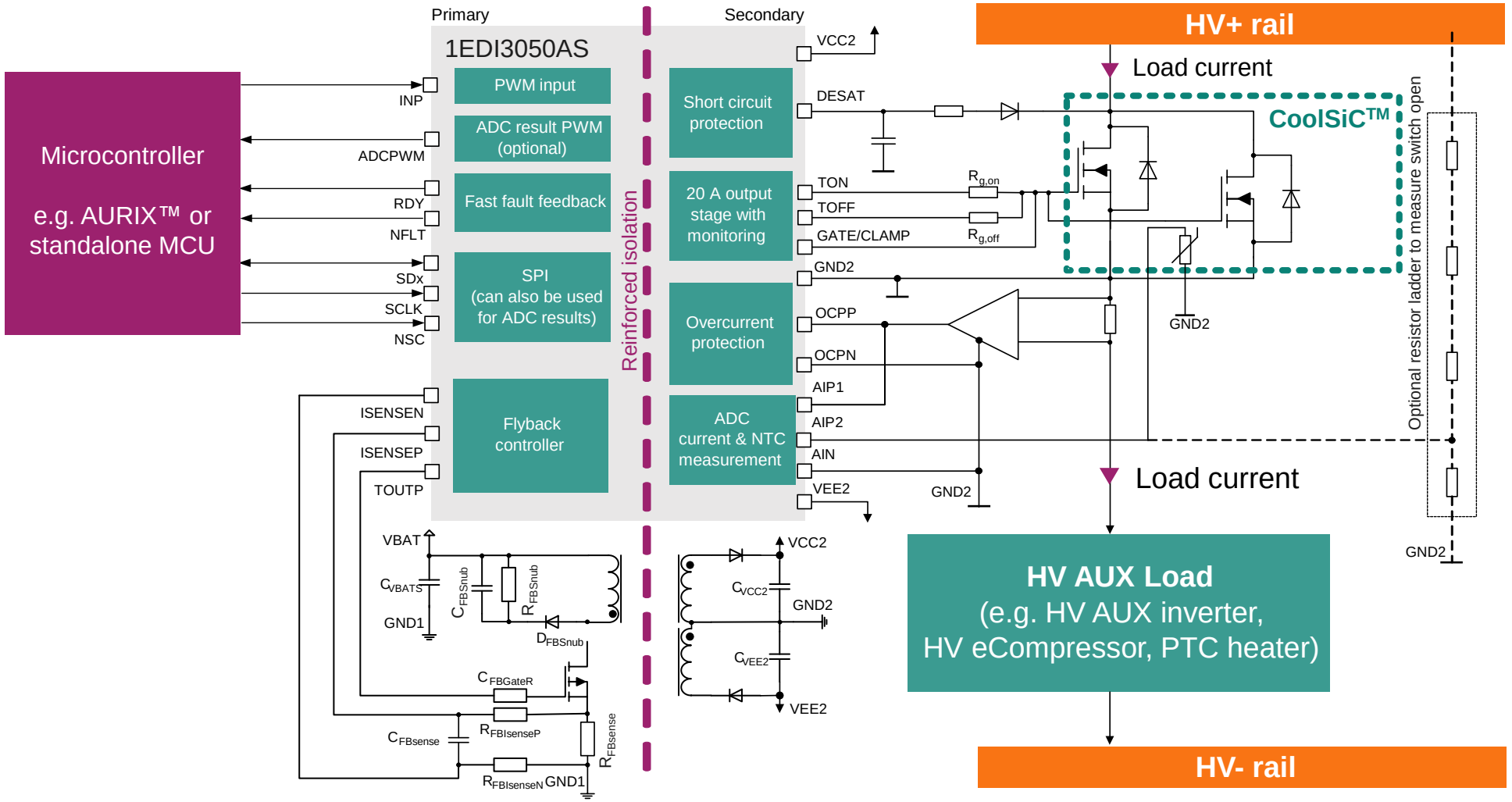

Copyright © Infineon Technologies AG 2024. All rights reserved.

EiceDRIVER™ 1EDI3050AS product highlights
Highest feature integration for cost effective designs

Key features



– ASIL B-compliant for easy system integration
– **SPI for easy system configuration**
– Reinforced isolation
– Accurate isolated DC/DC via flyback controller
– Driving the power devices
– Passive clamping if device is unpowered
– Primary & secondary supply monitoring
– Gate & output stage monitoring
– Fast over current detection via ext. shunt
– Redundant over current detection via DESAT (e.g. to reduce shunt FIT rates)
– Isolated 12-Bit DS-ADC with dual inputs for
– Current meas. via ext. CSA and shunt
– NTC measurement
– Or switch open measurement



Copyright © Infineon Technologies AG 2024. All rights reserved.

Support
EiceDRIVER™ 1EDI3050AS

Technical documents	Status
Datasheet	available
Application note (flyback)	available
Application note (general)	Q1/2024
Safety documentation*	available

Boards	Status
1EDI3050 EVAL BOARD	available
1EDI305xAS Evaluation Board Schematics	available
1EDI305xAS Evaluation Board GUI Software	available

Design and simulation tools	Status
SIMetrix, PSPICE model + Flyback	available
Infineon Designer online template	Q1/2024

Check out the webpage for
further information and design support:
www.infineon.com/eicedriver-xEV

* NDA restrictions

Copyright © Infineon Technologies AG 2024. All rights reserved.

1EDI3050AS & 1EDI3033AS offering ISO 26262 ASIL B-compliance

ASIL B safety requirements on device level:

- **PWM Command Integrity** from INP even to V_{GS}
- **Avoid power device destruction (includes power device monitoring)**

Example: 1EDI3050AS.

1EDI3033AS offers identical safety mechanisms

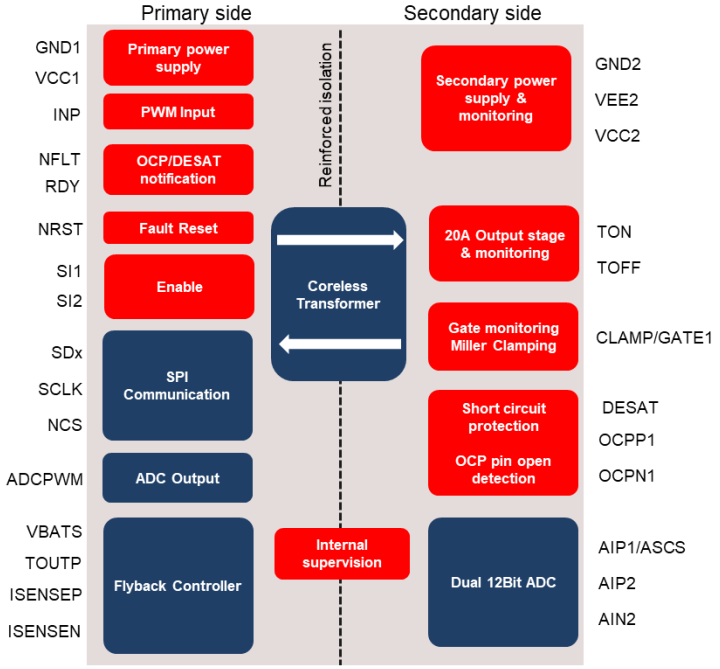

Implemented internal safety mechanisms	
Desaturation (DESAT)	The Desaturation function (DESAT) protects the IGBT or SiC MOSFET in case of short circuit.
Over Current Protection (OCP)	The Over Current Protection (OCP) protects the IGBT or SiC MOSFET in case of short circuit.
Power supply monitoring	Under & overvoltage monitoring of VCC2 & VEE2.
UV monitoring	Undervoltage monitoring of VCC1
Life-sign loss detection	The primary side monitors the secondary side by the mean of the life-sign watchdog (LW)
PMU supervision	The undervoltage of the internal voltage regulators in in the 1.5 V domain is checked on the primary and the secondary side
Output stage monitoring	The Output Stage Monitoring (OSM) checks the correct state of TON/TOFF pin against the received PWM signal at the secondary side
Gate monitoring	The GATE Monitoring checks the correct state of the GATE pin of the external power device against the received PWM signal at the secondary side, via CLAMP/GATE1 pin
Parity bit protection	Each 8-bit configuration register of the primary and the secondary side is protected by one parity bit

Copyright © Infineon Technologies AG 2024. All rights reserved.

Additional 1EDI3050AS Features

EiceDRIVER™ 1EDI3050AS
Configurability via SPI to maximize the gate driver usability

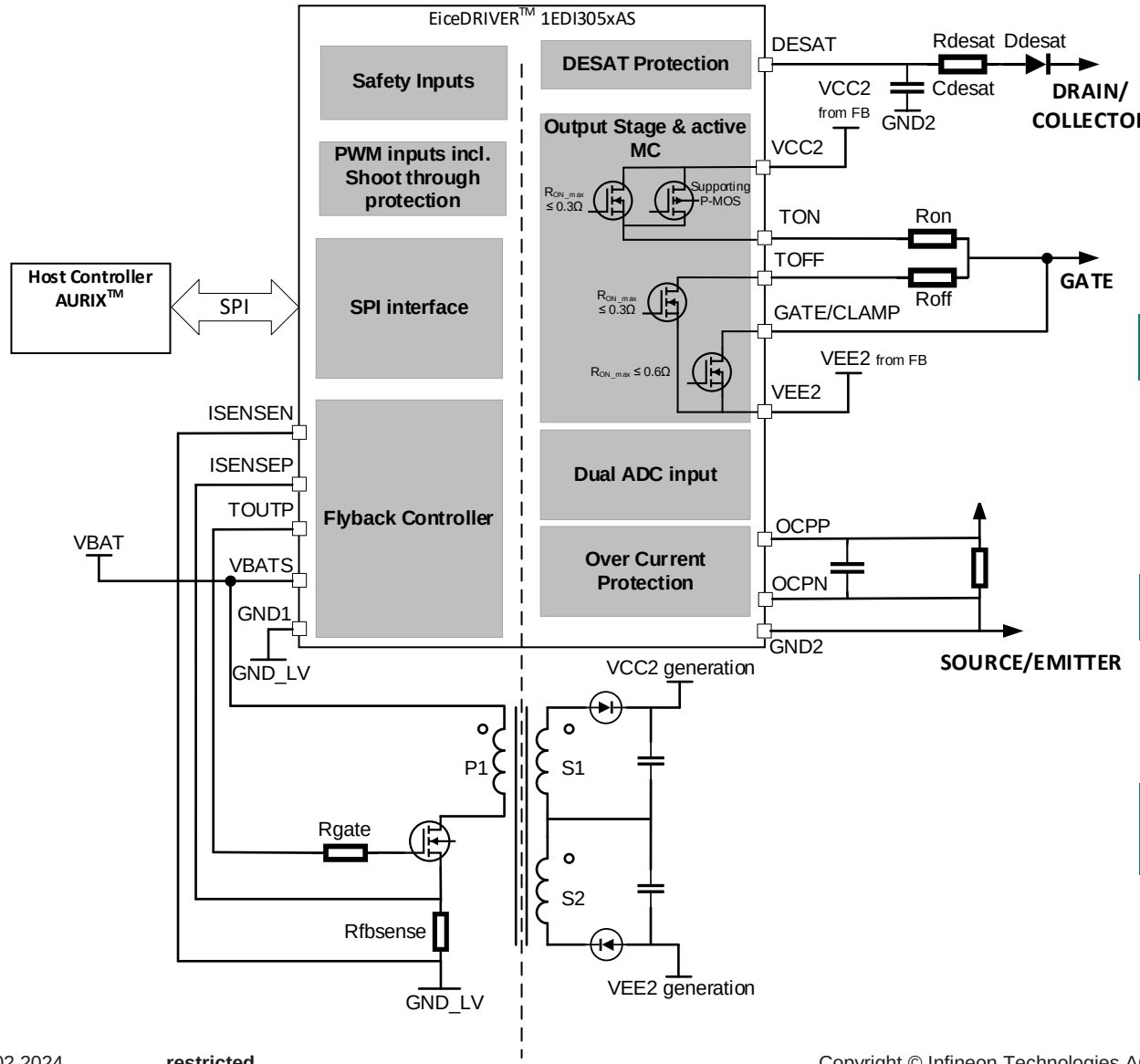

Adjustable DESAT detection to support different power devices

- Adjustable trigger threshold (5.5V – 9V, 0.5V Steps)
- Adjustable blanking time (160ns – 860ns, 100ns steps)
- Adjustable current source (1uA – 1.5mA, 500uA steps)

Adjustable soft-off for fast & reliable over current / DESAT switch off

- Fast soft-off ramp down with adjustable ramp (ramp 30ns/V till adjustable set point for normal off)

Adjustable OCP detection to support different power devices

- Adjustable trigger threshold (500mV – 900mV, 100mV Steps)

Adjustable flyback controller voltage & frequency with <±2 error to utilize different SiC and IGBT power devices to its limits

- Adjustable VCC2 voltage (14V – 21.5V, 0.5V Steps)
- Adjustable flyback switching frequency (100kHz – 550kHz)

Copyright © Infineon Technologies AG 2024. All rights reserved.

EiceDRIVER™ 1EDI305xAS: Accurate closed loop flyback controller
Increasing system efficiency by reducing SiC conduction losses

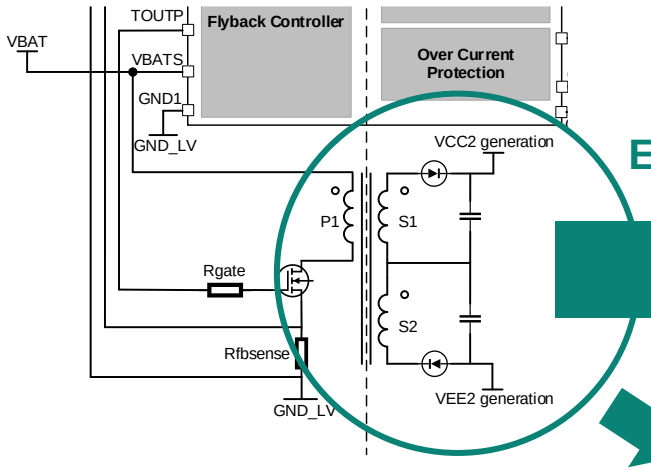

EiceDRIVER™ 1EDI305xAS

15 V ±2%

SiC MOS Rdson dependency of Gatevoltage

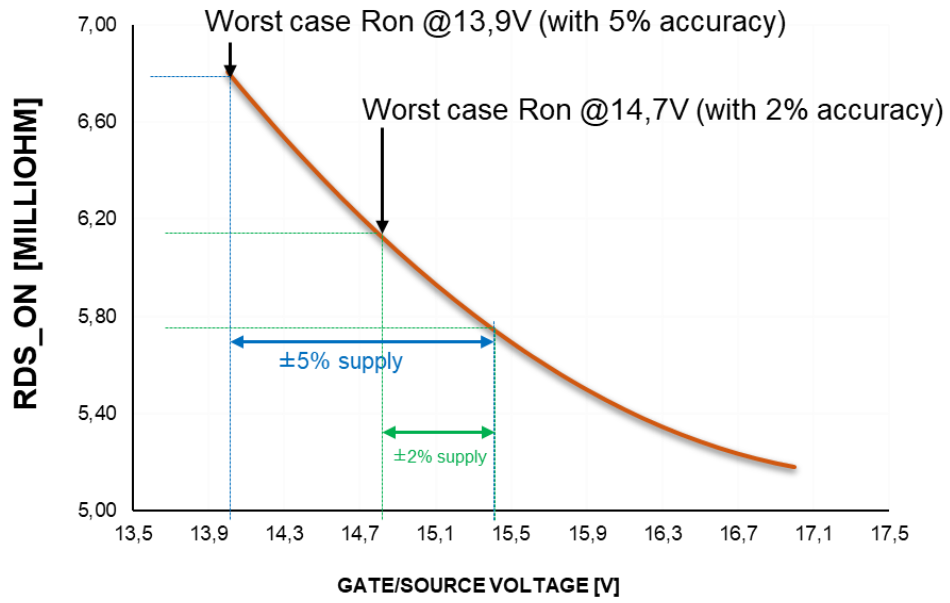

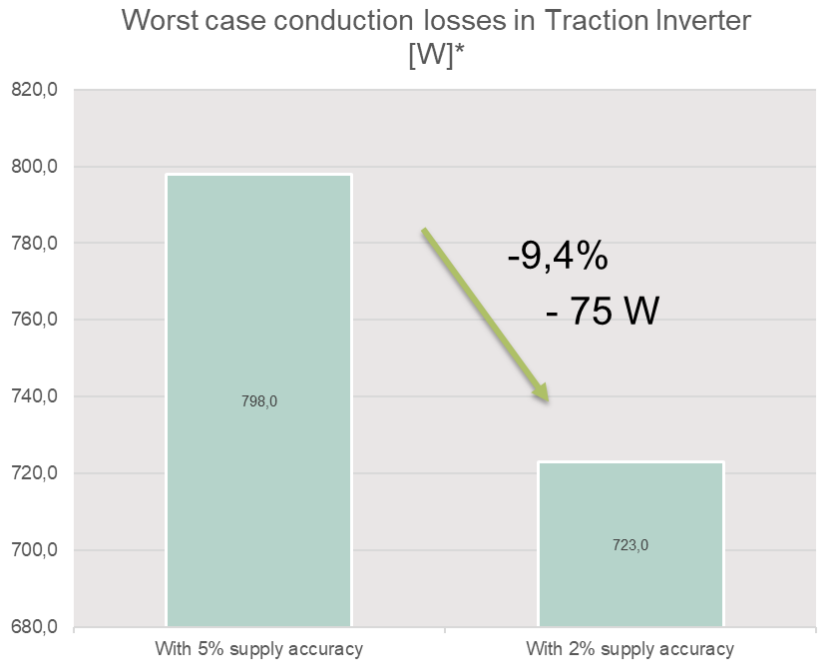

* SiC FS03; 400Arms; 600V; M=0,9; fsw = 20kHz; Rgon=Rgoff =5,1Ω

VCC2 accuracy matters!

Especially for SiC!

Copyright © Infineon Technologies AG 2024. All rights reserved.


Infineon