

OPTIREG™ linear

Product presentation

ATV SP APS

Q4 2026

Public

Table of contents

1 OPTIREG™ 3

2 OPTIREG™ linear 6

General Purpose & High Performance 12

Trackers 24

Post Regulators 30

Application specific 34

3 Cross-selling 39

4 Trainings 44

5 Supporting Tools & Documents 47

6 Device Naming Nomenclature 49

Copyright © Infineon Technologies AG 2026. All rights reserved.

OPTIREG™

OPTIREG™ Portfolio

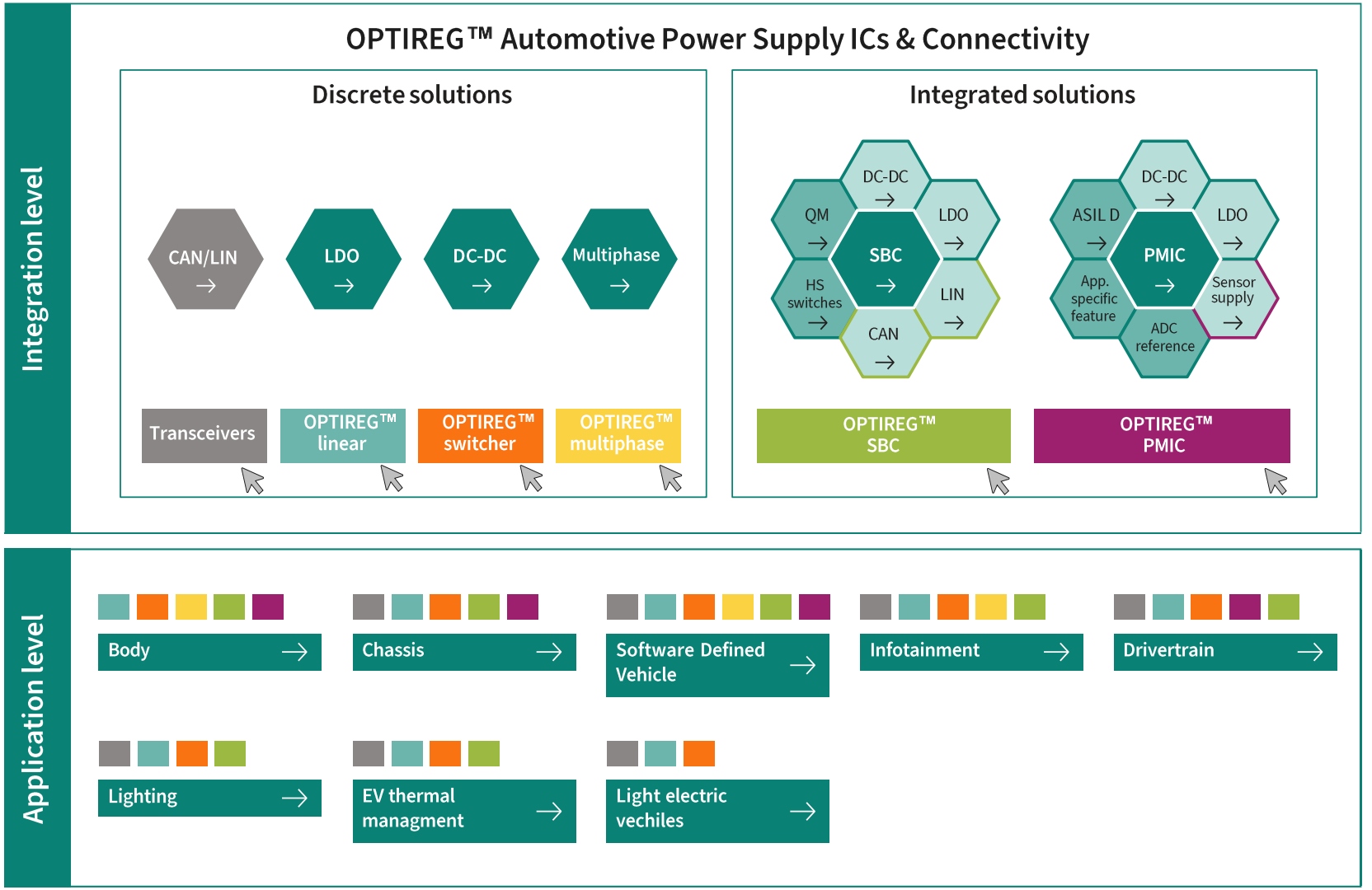

Copyright © Infineon Technologies AG 2026. All rights reserved.

OPTIREG™ Power Supply fits in all automotive relevant trends

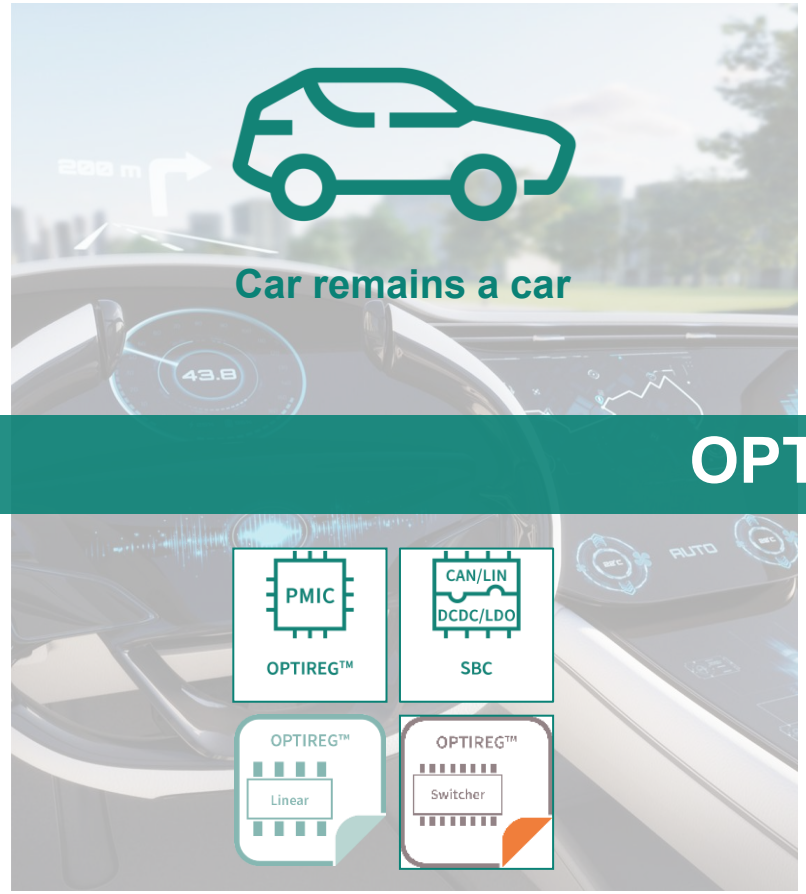





OPTIREG™ provides the right products

to support all these trends

Traditional applications ***Efficient supply concepts*** ***Emerging business models***

Copyright © Infineon Technologies AG 2026. All rights reserved.

OPTIREG™ linear

OPTIREG™ linear in a Nutshell

Product families

- General purpose
- Application specifics
- High performances
- Linear post regulators
- Trackers

Small, Efficient and Reliable

Key Feature	Customer Benefit
Extensive portfolio for versatile applications	Enable design flexibility across a wide range of automotive applications
Low dropout voltage	Efficient operation during low input voltage events
Very low quiescent current	Longer battery life in low-power modes
Tiny packages	Saves board space in compact designs
Integrated protection features	Boosts safety and reduces external components
High power supply rejection ratio	Improve signal integrity in noise-sensitive automotive systems: ADAS. Sensors..etc

Applications

BMS · Body Comfort · Transmission · Telematics · Car antenna · Truck · Infotainment · Autonomous driving · xEV · CAV

Copyright © Infineon Technologies AG 2026. All rights reserved.

OPTIREG™ linear

Extensive portfolio for versatile applications

Product family	General purpose	High performances	Application specifics	Trackers	Linear post regulators
Regulator type	**LDO Voltage Regulator**	**LDO Voltage Regulator**	**LDO Voltage Regulator**	**Tracker**	**Post Regulator**
Description	Well-established LDO voltage regulators portfolio for general automotive applications	Premium LDO voltage regulators with enhanced performances for additional use cases	Tailored for specific applications, such as antenna supply or 24V; multiple outputs available	Ideal to supply an off-board load (e.g. sensor); it follows an external voltage reference with high accuracy	To be used after a Pre Regulator (e.g. a switcher) for optimized system efficiency (e.g. ADAS, traction inverter)
Low quiescent current consumption	◑	●	◑	◕	◑
Reverse polarity protection	◕	◑	◑	●	◑
Stable with Low ESR Capacitors	●	●	●	●	●
Drop out voltage	◕	●	◑	◑	◑
Multi-Output Support	○	○	●	○	○
Current limitation	◑	●	◑	●	◑
Features integration	◕	◕	●	◑	◑

Copyright © Infineon Technologies AG 2026. All rights reserved.

OPTIREG™ linear

Our portfolio offers a wide range of solutions for different use cases

Product family	General purpose	High performances	Application specifics	Trackers	Linear post regulators
Regulator type	**LDO Voltage Regulator**	**LDO Voltage Regulator**	**LDO Voltage Regulator**	**Tracker**	**Post Regulator**
Input voltage range (V)	3,2-45	2,7-45	3,0-65 (OV protection)	3,5-45	2,3-20
Output voltage (V)	3,3-5,0-Adj.	3,3-5,0-Adj.-Select(3,3/5)	3,3-5,0-Adj.	Tracking	3,3-5,0-Adj.
Maximum output current (mA)	30-1000	50-500	70-650	20-400	150-1500
Dropout voltage (V)	0,16-1	0,07-0,3	0,25-0,35	0,2-0,28	0,2-0,9
Quiescent current @ low load (µA)	20-900	4,3-40	36-1800	40-230	30-1200
Output accuracy (%)	2-4	2	0,5-4	0,1-0,5	2-3
Output Noise	Moderate/Low	Low	Application-optimized	Very Low	Low
24v applications	No	No	Yes	No	No
Features	Enable, Reset	Enable, Reset	Enable, Reset	Enable, Power Good, Feedback	Enable, Reset

Copyright © Infineon Technologies AG 2026. All rights reserved.

OPTIREG™ linear
The best fit starts with understanding product features

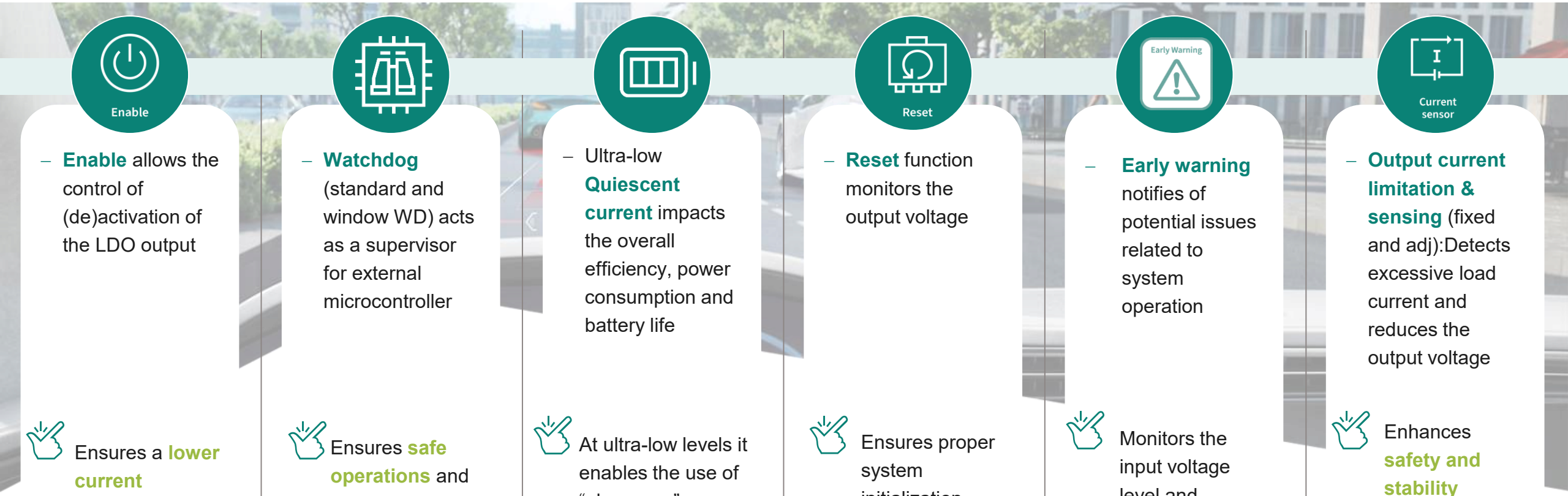

Enable

- **Enable** allows the control of (de)activation of the LDO output

Ensures a **lower current consumption** in standby mode

Watchdog

- **Watchdog** (standard and window WD) acts as a supervisor for external microcontroller

Ensures **safe operations** and contributes to system reliability

Quiescent current

- Ultra-low **Quiescent current** impacts the overall efficiency, power consumption and battery life

At ultra-low levels it enables the use of “always-on” devices.

Reset

- **Reset** function monitors the output voltage

Ensures proper system initialization, **fault-recovery** and operational stability

Early warning

- **Early warning** notifies of potential issues related to system operation

Monitors the input voltage level and generates a signal or alert based on a predefined threshold

Current sensor

- **Output current limitation & sensing** (fixed and adj):Detects excessive load current and reduces the output voltage

Enhances **safety and stability**

Copyright © Infineon Technologies AG 2026. All rights reserved.

OPTIREG™ linear Portfolio Overview

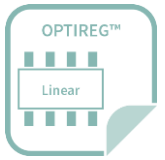

SOP	General Purpose	High Performance	Application Specific	Trackers	Post Regulators
< 2012	TLE7xx		WD TLE44xx RS EN; WD TLE42xx RS	ADJ EN TLE425xx PG FB	
2012	TLF49xx	TLS8xx WD Iq			TLF19x EN
2014					TLS2xx AO EN RS
2015		TLS8xxBxx Iq			
2016	TLE427xx; TLE428xx				
2017			TLT8xx EN		
2018	TLE429xx				
2019	TLS7xx			ADJ EN TLS1xxx PG Iq	
2020		TLS850C2 RS Iq	TLF11251xx	ADJ EN TLT1xx PG Iq	
			TLF4277xx		
2021	TLE426xx				
2023		EN RS TLS8xxF3xx WD Iq	TLF4477-3LA Dual ch.		
2024		TLS8x0A4xx AO Iq			
2025	TLE4263-2GS/2GM				

In Production

ADJ: Reference Voltage **AO**: Always On **Iq**: low quiescent current **EN**: Enable **WD**: Watchdog **PG**: Power Good **FB**: Feedback **RS**: Reset

Copyright © Infineon Technologies AG 2026. All rights reserved.

General Purpose & High Performance

OPTIREG™ linear *General Purpose*

General purpose

Key features	Customer benefits
– Wide Input Voltage Range	– Safe operation during load dump and cold crank events without external protection circuitry.
– Robust Transient Handling	– Protects ECUs from voltage spikes and harsh battery conditions common in vehicles, improving system reliability.
– Integrated Diagnostic Features (e.g. watchdogs, reset, power-good)	– Reduces need for extra ICs, saving board space and simplifying system design for safety-critical functions.
– Wide variety of packages	– Improves thermal performance and mechanical robustness in high-vibration, high-temperature environments.

Enable, Reset, Watchdog			TLE4263-2xx	TLE7273-2xx		TLE4291E	
Reset, Watchdog				TLE4678x			
Enable + Reset			TLE42994E TLE42994GM	TLE4699x			
Reset		TLF4949x	TLE42694x TLE42794x TLE42994G		TLE7270-2x TLE4473x	TLE4675x TLE42754x	
Enable	TLE4296-2G Vxx	TLS710B0EJV50	TLE4266xx TLS715B0EJV50			TLE4276xx	
Always On			TLE4264-2G TLE42644G			TLE4274Gx TLE42744x	TLE4284DV
$I_{out,max}$ (mA)							
	30	100	150-180	200	300	400-450	1000

Applications

- Body Comfort
- Telematics
- Infotainment
- Transmission
- Chassis and Transmission
- Powertrain

Copyright © Infineon Technologies AG 2026. All rights reserved.

OPTIREG™ linear *High Performance*

High performances

Key features	Customer benefits
– Wide Input Voltage Range	– Safe operation during load dump and cold crank events without external protection circuitry.
– Robust Transient Handling	– Protects ECUs from voltage spikes and harsh battery conditions common in vehicles, improving system reliability.
– Integrated Diagnostic Features (e.g. watchdogs, reset, power-good)	– Reduces need for extra ICs, saving board space and simplifying system design for safety-critical functions.
– Wide variety of packages	– Improves thermal performance and mechanical robustness in high-vibration, high-temperature environments.
– Very low quiescent current consumption	– Overall efficiency improvement and battery life extension; increasing number of LDO can be connected to the battery

Enable, Reset, Watchdog			TLS820F3EL Vxx				TLS850FxTA V50
Reset, Watchdog							TLS850F3TU Vxx
Enable, Reset		TLS810D1xx			TLS835D2EL VSE		
Reset							TLS850C2TE Vxx
Enable	TLS805B1xx	TLS810B1xx			TLS835Bxx		TLS850B0xx
Always on		TLS810A1LD Vxx		TLS830A4EP V50		TLF80511xx	TLS850A4TE V50
$I_{out,max}$ (mA)	50	100	200	300	350	400	500

Applications

- Body Comfort
- Telematics
- Infotainment
- Transmission
- Chassis and Transmission
- Powertrain

Copyright © Infineon Technologies AG 2026. All rights reserved.

General Purpose and High Performance portfolios perfectly complement each other, giving you a full flexibility

Use case examples

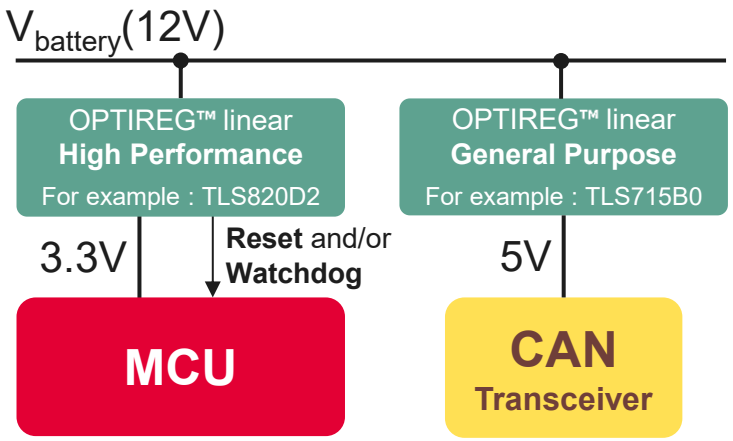

2 product families

1 Mission

Best fit LDO to supply your MCU and CAN Transceiver

High performances	General purpose
TL**S8**xx	TLE4**2**xxx
TL**F80511**	TLE4**4**xxx
	TLE4**6**xxx
	TL**E7xxx**
	TL**F4949**
	TL**S71**x

Target applications

Powertrain · Body Comfort · Chassis and Transmission · 5G Telematics · Infotainment · Transmission

Topology

12V / 12V Battery

Best suited to supply

Micro-controller

Transceiver
CAN
CAN PN
CAN FD

Also suitable to supply

- Sensors (on-board)
- Actuator ICs
- Stand-by supply
- Low-load LEDs
- Microphones

Feature set

Always On · Enable · Reset

Key strengths

Fast Response · Ultra-low Drop-out (V_{in}, V_{out}) · Very good Heat dissipating package · Reduced cost

Temperature Range

AEC-Q100 Grade 1 (T_j = 150°C)

Unique differentiators

Infineon Automotive Quality · Current Limitation (I_{out}) · Over-Temperature shutdown

Copyright © Infineon Technologies AG 2026. All rights reserved.

General Purpose or High Performance ?
Which product family is best for my application/project?

General purpose | High performances

The switch depends on

Package Size → **Performance** → **Total Solution cost**

General Purpose

Good

- Well-established Reliability
- Good device performance
- No new product developments for this family

TLE42xxx
TLE44xxx
TLE46xxx
TLE7xxx
TLF4949
TLS71x

General purpose

High Performance

Best

- Newest Front-end Technology
- Smaller and better Packages
- Enhanced device performance

TLS8xx
TLF80511

High performances

Key Strengths

General Purpose: Reverse polarity proof; Very good Heat dissipating package

High Performance: Fast Response; Suitable for severe Cranking; Ultra-low Drop-out; Low quiescent current (I_q); Cost saving on passive components; Very good Heat dissipating package

Main Packages

Available in: General Purpose; High Performance; Both families

General Purpose					
PG-SCT595	PG-SOT223	PG-DSO-8-EP	PG-SSOP-14	PG-TO252-x	PG-TO263-x
A*=2.9 x 1.6 mm²	A*=6.5 x 3.5 mm²	A*= 5 x 4 mm²	A*=4.9 x 3.9 mm²	A*=6.5 x 6.2 mm²	A*=10 x 9.3 mm²
R_{thJA}**=~ 85 °C/W	R_{thJA}**=~ 50 °C/W	R_{thJA}**=~ 50 °C/W	R_{thJA}**=~ 45 °C/W	R_{thJA}**=~ 30 °C/W	R_{thJA}**=~ 20°C/W

High Performance					
PG-TSON-10	PG-DSO-8-EP	PG-SSOP-14	PG-TSDSO-14	PG-TO252-x	PG-TO263-x
A*=3.3 x 3.3 mm²	A*= 5 x 4 mm²	A*= 4.9 x 3.9 mm²	A*=4.9 x 3.9 mm²	A*=6.5 x 6.2 mm²	A*=10 x 9.3 mm²
R_{thJA}**=~ 60 °C/W	R_{thJA}**=~ 50 °C/W	R_{thJA}**=~ 45 °C/W	R_{thJA}**=~ 45 °C/W	R_{thJA}**=~ 30 °C/W	R_{thJA}**=~ 20°C/W

-x : **PG-252** and **PG-263** Packages are available in **3-pin**, **5-pin** and **7-pin** variants

* **A** = **Body Area** : Length x Width

** R_{thJA} : **Thermal Resistance** Junction to ambient on FR4 2s2p board

Copyright © Infineon Technologies AG 2026. All rights reserved.

OPTIREG™ linear: General Purpose and High Performance
Portfolio of always-on LDOs (without ENABLE)

General purpose | High performances

Always On










PG-SCT595	PG-TSON-10	PG-SOT223	PG-DSO-8-EP	PG-SSOP-14	PG-TSDSO-14	PG-TO252-x	PG-TO263-x
A*=2.9 x 1.6 mm²	A*=3.3 x 3.3 mm²	A*=6-5 x 3.5 mm²	A*=5 x 4 mm²	A*=4.9 x 3.9 mm²	A*=4.9 x 3.9 mm²	A*=6.5 x 6.2 mm²	A*=10 x 9.3mm²
R_{thJA}**= ~ 85°C/W	R_{thJA}**= ~ 60°C/W	R_{thJA}**= ~ 50°C/W	R_{thJA}**= ~ 50°C/W	R_{thJA}**= ~ 45°C/W	R_{thJA}**= ~ 45°C/W	R_{thJA}**= ~ 30°C/W	R_{thJA}**= ~ 20°C/W

* **A** = **Body Area** : Length x Width

** R_{thJA} : **Thermal Resistance** Junction to ambient on FR4 2s2p board

-x :**PG-252** and **PG-263** Packages are available in **3-pin**, **5-pin** and **7-pin** variants

xV **Fixed** V_{OUT} = xV

ADJ **Adjustable** V_{OUT}

Iq Low quiescent current (Iq)

Device maximum output current ($I_{out,max}$)

100-150 mA	300 mA	400 mA	500 mA	1000 mA
General purpose				
TLE42644G 5V	TLE4274GS V25 2.5V	TLE42744E V50 5V TLE42744GSV33 3.3V TLE42744D Vxx 3.3V 5V TLE4274xG Vxx 3.3V 5V 10V		TLE4284DV ADJ
High performances				
TLS810A1LD Vxx 3.3V 5V Iq	TLS830A4EP V50 5V Iq	TLF80511EJ Vxx 3.3V 5V TLF80511TF Vxx 5V TLF80511TC 5V	TLS850A4TE V50 5V Iq	

Alternative Packages

Alternative Packages

Click on the part to access its website

Copyright © Infineon Technologies AG 2026. All rights reserved.

OPTIREG™ linear : General Purpose and High Performance Portfolio of LDOs with ENABLE only (INHIBIT)

General purpose | High performances

Enable

xV **Fixed** V_{OUT} = xV

ADJ **Adjustable** V_{OUT}

SEL 3.3V/5V Selectable V_{OUT}= **5V** or **3.3V**

Low quiescent current (Iq)









PG-SCT595	PG-TSON-10	PG-SOT223	PG-DSO-8-EP	PG-SSOP-14	PG-TO252-x	PG-TO263-x
A*=2.9 x 1.6 mm²	A*=3.3 x 3.3 mm²	A*=6-5 x 3.5 mm²	A*=5 x 4 mm²	A*=4.9 x 3.9 mm²	A*=6.5 x 6.2 mm²	A*=10 x 9.3mm²
R_{thJA}**= ~ 85°C/W	R_{thJA}**= ~ 60°C/W	R_{thJA}**= ~ 50°C/W	R_{thJA}**= ~ 50°C/W	R_{thJA}**= ~ 45°C/W	R_{thJA}**= ~ 30°C/W	R_{thJA}**= ~ 20°C/W

* **A** = **Body Area** : Length x Width

** R_{thJA} : **Thermal Resistance** Junction to ambient on FR4 2s2p board

:**PG-252** and **PG-263** Packages are available in **3-pin**, **5-pin** and **7-pin** variants

Device maximum output current ($I_{out,max}$)

30 mA	50 mA	100 mA	150 mA	350 mA	400 mA	500 mA

General purpose

- **TLE4296-2G Vxx** — 3.3V, 5V
- **TLS710B0EJ V50** — 5V
- **TLE42664G** — 5V
- **TLE4266-2GS V33** — 3.3V
- **TLS715B0EJ V50** — 5V

Newer Generation

- **TLE42764DVxx** — ADJ, 5V
- **TLE42764GV** — ADJ

High performances

- **TLS805B1LD V50** — 5V, Iq
- **TLS805B1SJV** — ADJ, Iq
- **TLS810B1LD Vxx** — 3.3V, 5V, Iq
- **TLS810B1EJ Vxx** — 3.3V, 5V, Iq

Alternative Packages

- **TLS835B2EL VSE** — SEL 5V/3.3V, Iq
- **TLS835B2ELV** — ADJ, Iq
- **TLS850B0TE Vxx** — 3.3V, 5V, Iq
- **TLS850B0TB Vxx** — 3.3V, 5V, Iq

Click on the part to access its website

Copyright © Infineon Technologies AG 2026. All rights reserved.

OPTIREG™ linear : General Purpose and High Performance Portfolio of LDOs with RESET functionality

General purpose | High performances

Reset
Iq Low quiescent current (Iq)
EN With ENABLE
AO Always-ON

xV **Fixed V_{OUT} = xV**
ADJ **Adjustable V_{OUT}**
SEL 3.3V/5V Selectable V_{OUT}= **5V** or **3.3V**









PG-TSON-10	PG-DSO-8	PG-DSO-8-EP	PG-SSOP-14	PG-DSO-14	PG-TO252-x	PG-TO263-x
A*=3.3 x 3.3 mm²	A*= 5 x 4 mm²	A*=5 x 4 mm²	A*=4.9 x 3.9 mm²	A*=8.65 x 3.9 mm²	A*=6.5 x 6.2 mm²	A*=10 x 9.3mm²
R_{thJA}**= ~ 60°C/W	R_{thJA}**=~ 110°C/W	R_{thJA}**= ~ 50°C/W	R_{thJA}**= ~ 45°C/W	R_{thJA}**= ~ 63°C/W	R_{thJA}**= ~ 30°C/W	R_{thJA}**= ~ 20°C/W

* **A** = **Body Area** : Length x Width

** R_{thJA} : **Thermal Resistance** Junction to ambient on FR4 2s2p board

-x :**PG-252** and **PG-263** Packages are available in **3-pin**, **5-pin** and **7-pin** variants

Device maximum output current ($I_{out,max}$)

100 mA	150 mA	180-200 mA	300 mA	350 mA	400 mA	450 mA	500 mA
General purpose							
TLF4949EJ AO 5V	TLE42x94G AO 5V	TLE42694-2EL AO 5V	TLE4699E 5V EN	TLE7270-2x AO	TLE4675D AO 5V	TLE42754G AO 5V	
TLF4949SJ AO 5V	TLE42x94E AO 5V	TLE42994G AO 5V	TLE4699GM 5V EN	TLE4473G V55-2 EN	TLE4675G AO 5V	TLE42754D AO 5V	
	TLE42x94GM AO 5V	TLE42994E 3.3V 5V EN		TLE4473G V53 EN		TLE4291E EN 5V	
		TLE42994GM 5V EN					
	Newer Generation						
High performances							
TLS810D1LD Vxx 3.3V 5V Iq EN				TLS835D2EL VSE SEL 5V/3.3V EN Iq			TLS850C2TE Vxx AO 3.3V 5V Iq
TLS810D1EJ Vxx 3.3V 5V Iq EN							

Click on the part to access its website

Copyright © Infineon Technologies AG 2026. All rights reserved.

OPTIREG™ linear : General Purpose and High Performance Portfolio of LDOs with Reset+Watchdog functionality

General purpose | High performances

Reset + Watchdog



PG-DSO-8	PG-DSO-8-EP	PG-SSOP-14	PG-DSO-14	PG-TO252-x	PG-TO263-x
A*= 5 x 4 mm²	A*=5 x 4 mm²	A*=4.9 x 3.9 mm²	A*=8.65 x 3.9 mm²	A*=6.5 x 6.2 mm²	A*=10 x 9.3mm²
R_{thJA}**=~ 110°C/W	R_{thJA}**= ~ 50°C/W	R_{thJA}**= ~ 45°C/W	R_{thJA}**= ~ 63°C/W	R_{thJA}**= ~ 30°C/W	R_{thJA}**= ~ 20°C/W

* A = **Body Area** : Length x Width

** R_{thJA} : **Thermal Resistance** Junction to ambient on FR4 2s2p board

-x :**PG-252** and **PG-263** Packages are available in **3-pin**, **5-pin** and **7-pin** variants

xV **Fixed** V_{OUT} = xV

SEL 3.3V/5V Selectable V_{OUT}= **5V** or **3.3V**

EN With ENABLE

AO Always-ON

Device maximum output current ($I_{out,max}$)

	180 mA	200 mA	300 mA	450 mA	500 mA
General purpose	Adj. RES & WD Timing; Fixed RESET Voltage TLE4263-2ES EN 5V TLE4263-2GM 5V EN TLE4263-2GS 5V EN	TLE4678-2EL AO 5V Adj. RES & WD Timing; Adj. RESET Voltage; Adj. WD Threshold; Separate RES & WD Outputs TLE4678EL AO 5V Adj. RES & WD Timing; Adj. RESET Voltage; Adj. WD Threshold; Separate RES & WD Outputs	TLE4473G V53 EN	Adj. RES & WD Timing; Adj. RESET Voltage; Separate RES & WD Outputs TLE4291E 5V EN	
High performances		TLS820F3EL Vxx 3.3V 5V ↓Iq EN Adj. RES & WD Timing; Adj. RESET Voltage; WD ON/OFF; Separate RES & WD Outputs			TLS850F0TA V50 5V EN TLS850F1TA V50 5V EN TLS850F2TA V50 5V EN Different Reset and Watchdog Timings Fixed RESET Timing; Fixed Watchdog Timing; Adj. RESET Voltage TLS850F3TU Vxx 3.3V 5V ↓Iq Adj. RES & WD Timing; Fixed RESET Voltage; Watchdog ON / OFF Newer Generation

Click on the part to access its website

Copyright © Infineon Technologies AG 2026. All rights reserved.

OPTIREG™ linear voltage regulator with Reset and Watchdog TLS820F3ELVxx, TLS850F3TUVxx

High performances

Main Features

- 2 current levels: 200 mA (TLS820) and 500 mA (TLS850)
- 2 voltage options : 3.3V (V33 version) and 5V (V50 version)
- Flexible **Reset** function to supervise the output voltage
- **Watchdog** function with adjustable timing and dedicated on/off pin
- Low current consumption (typ. **33 µA** @500 mA)
- Enable function in **200 mA version**
- Minimum operation voltage: **3V**

Key Benefits

- Extended longevity of the connected devices (e.g. microcontroller) due to stable and monitored supply (through **Reset** and **Watchdog**)
- Battery life extensions and system efficiency improvement (low current consumption)
- Extended functionality and more reliable engine start; suitable for cold cranking (functionality starts at **3V**)
- BOM optimization (integrated resistor at Reset output RO and small – min 1 µF – output capacitor)

Block Diagram

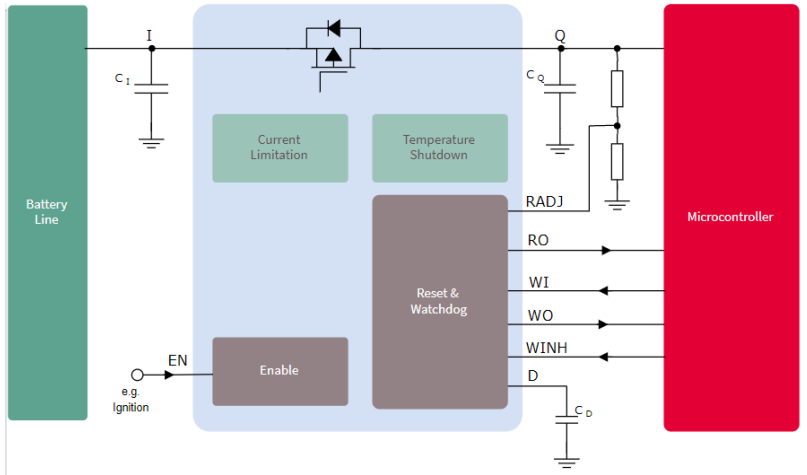

Applications



In production

Family overview



TLS850F3TUV50

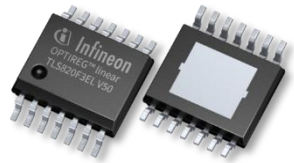

TLS820F3ELV50

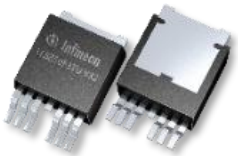

TLS850F3TUV33



TLS820F3ELV33

Copyright © Infineon Technologies AG 2026. All rights reserved.

OPTIREG™ linear voltage regulator - TLE4263-2GS

A monolithic integrated very low dropout voltage regulator with watchdog.

Successor for TLE4263GS (lower current consumption)

OPTIREG™ Linear

Main Features

- **Low-drop voltage**
- Inhibit input: can be switched off, reducing the current consumption to typically **0 mA**.
- Very low standby current consumption
- Overtemperature **protection**
- Reverse polarity **protection**
- **Watchdog** for monitoring microprocessor
- Wide input voltage range up to 45 V
- Output voltage 5V
- Output voltage tolerance ≤ ±2%
- 180 mA output current capability

Block Diagram

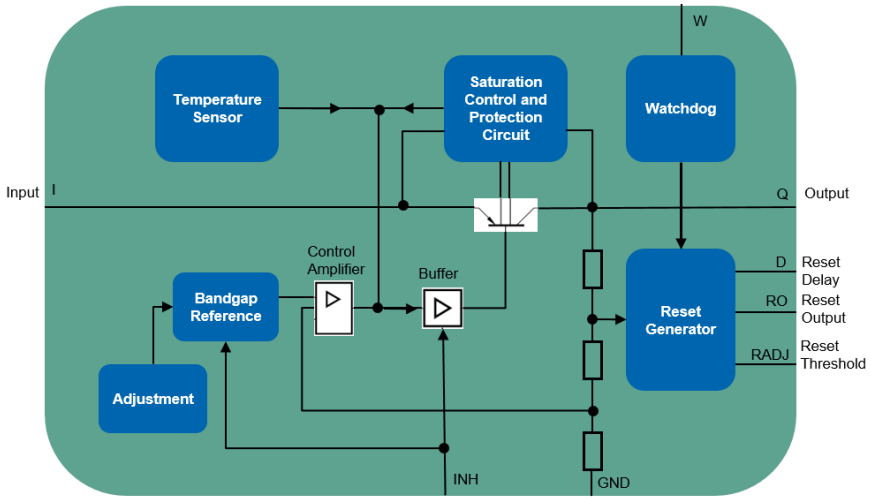

Applications

- Body Comfort
- Infotainment
- Telematics
- Transmission

Key Benefits

- Stable output voltage (low-drop voltage)
- Battery life (low current consumption)
- System reliability (Robust Protection Features)



In production

Copyright © Infineon Technologies AG 2026. All rights reserved.

OPTIREG™ linear voltage regulator - TLE4263-2GM

A monolithic integrated very low dropout voltage regulator with watchdog.

Successor for TLE4263GM (lower current consumption)



Main Features

- **Low-drop voltage**
- Inhibit input: can be switched off, reducing the current consumption to typically **0 mA**.
- Very low standby current consumption
- Overtemperature **protection**
- Reverse polarity **protection**
- **Watchdog** for monitoring microprocessor
- Wide input voltage range up to 45 V
- Output voltage 5V
- Output voltage tolerance ≤ ±2%
- 180 mA output current capability

Block Diagram

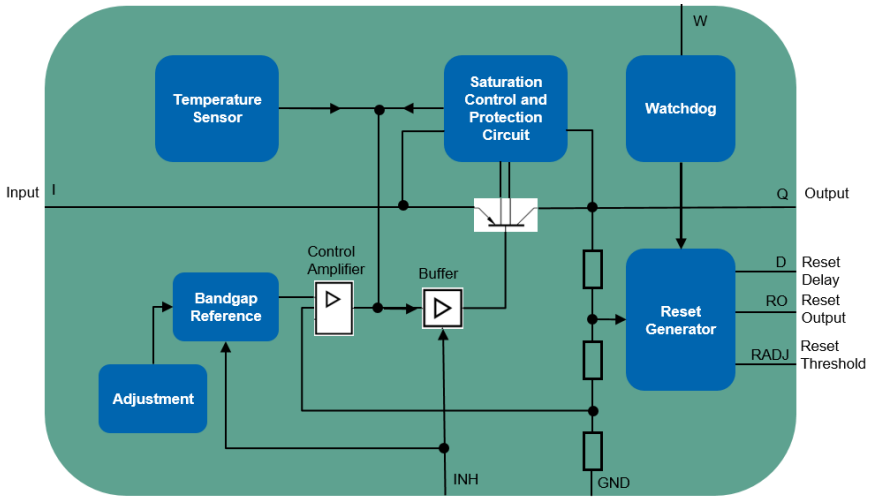

Applications

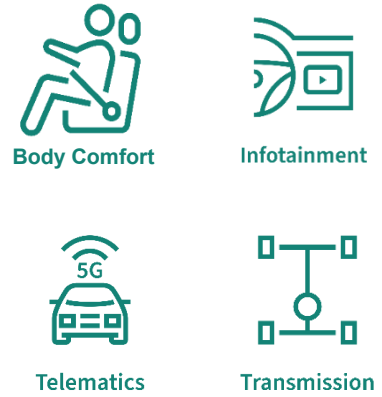

Key Benefits

- Stable output voltage (low-drop voltage)
- Battery life (low current consumption)
- System reliability (Robust Protection Features)



In production

Copyright © Infineon Technologies AG 2026. All rights reserved.

Trackers

OPTIREG™ linear *Trackers*

Trackers

Key features	Customer benefits
– Output voltage follows an external reference voltage (from a standard LDO)	– Trackers are well suited to supply off-board loads, with a standard LDO supplying the microcontroller; this protects the microcontroller, in case of off-board loads failures
– Reverse polarity protection	– In case output voltage would be higher than input voltage, no series diode at the input is needed; this improves safety and reduces external components
– Integrated Diagnostic Features (e.g. power-good)	– Reduces need for extra components, saving board space and simplifying system design for safety-critical functions.
– Wide variety of packages, including the tiny SCT-595	– Improves thermal performance and mechanical robustness in high-vibration, high-temperature environments; space saving with tiny packages
– Very high tracking accuracy (down to 0.1% in TLSxx)	– In case of supplying analog (ratiometric) sensors, it improves the sensors readings, increasing accuracy and reliability

Enable, Adjustment, Power Good				TLS115D0EJ TLS115D0LD	TLS125D0EJ TLT125D0EJ	
Enable/Adjustment (same pin), Power Good			TLE4254GS TLS4254EJS			
Enable/Adjustment (same pin), Feedback			TLE4254GA TLE4254EJA		TLE4253GS TLE4253E	
Enable, Adjustment				TLS115B0EJ TLS115B0LD	TLE4252D	TLE4251D TLE4251G
Enable/Adjustment (same pin)	TLS102B0MB	TLE4250-2G TLS105B0MB				
$I_{out,max}$ (mA)	20	50	70	150	250	400

Applications

- Body Comfort
- Sensor solutions
- Microphone
- Transmission
- Chassis and Transmission
- Powertrain

Copyright © Infineon Technologies AG 2026. All rights reserved.

If you need to supply a sensor (off-board), a satellite ECU or a Microphone with power, then you need to get a Tracker!

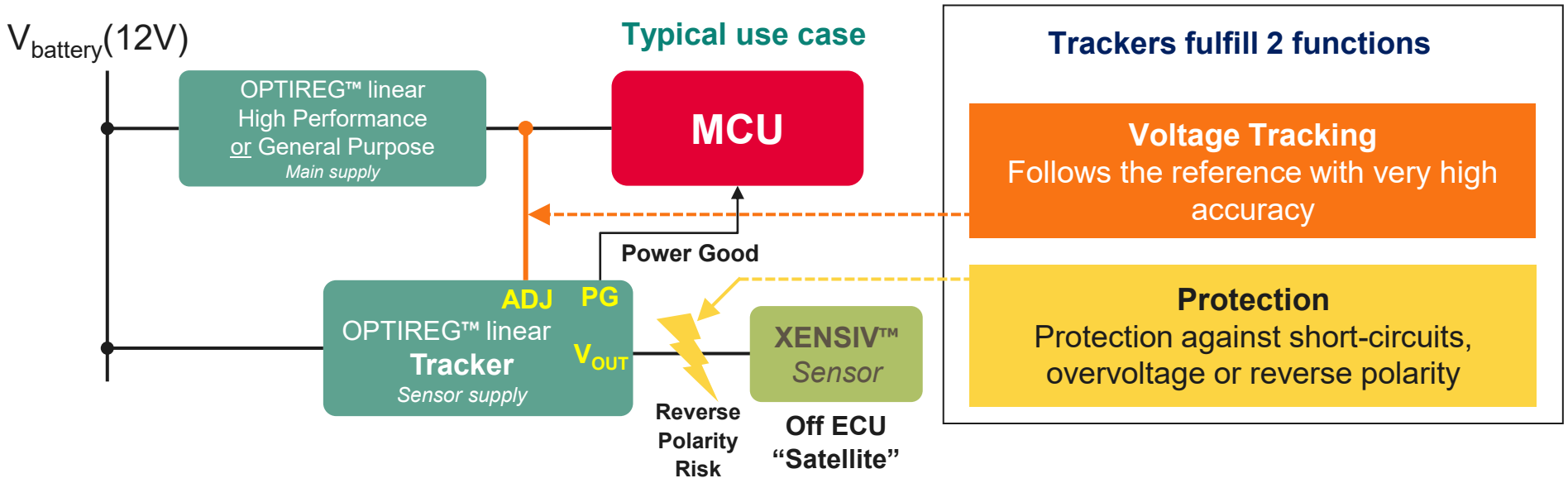

Trackers

TLS1xx
TLT1xx
TLE425x

Target applications

Powertrain
Body Comfort
Chassis and Transmission

Topology

12V
12V
Battery
Suitable as post-regulator
Pre-Reg.
Post-Reg.

Best suited to supply

Sensor solutions
Microphone

Also suitable to supply

Small lamps (LED)
Loads which need protection

Feature set

Enable
Power Good
V_{out}
Feedback
$V_{OUT} > V_{ADJ}$
IN
OUT
ADJ
FB
GND

Key strengths

Reverse polarity protection
High Accuracy
Soft Start
Fast Response

Temperature Range

AEC-Q100 Grade 1
T_j = 150°C
Extended Temperature Range
T_j = 160°C

Unique differentiators

Infineon Automotive Quality
Current Limitation
I_{out}
Over-Temperature shutdown
°C

Copyright © Infineon Technologies AG 2026. All rights reserved.

When do I need a Tracker? The different use cases for Trackers and battery-connected LDOs.

Trackers

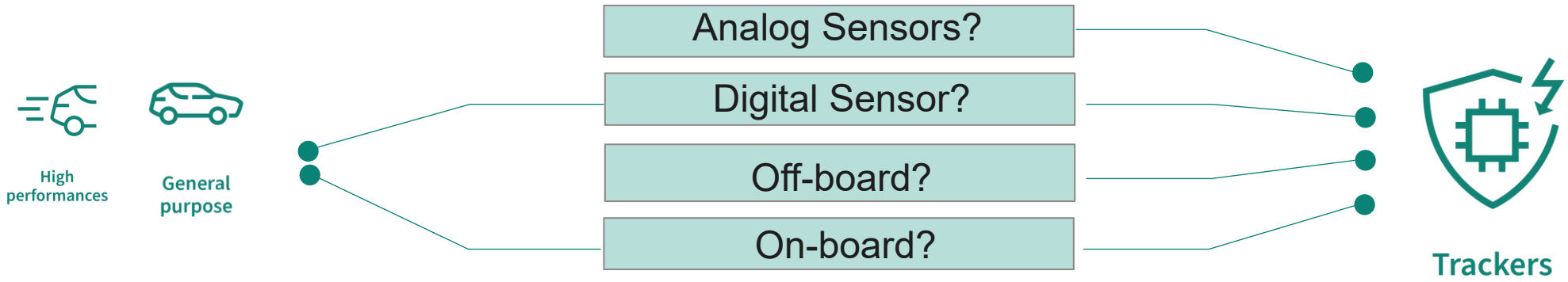

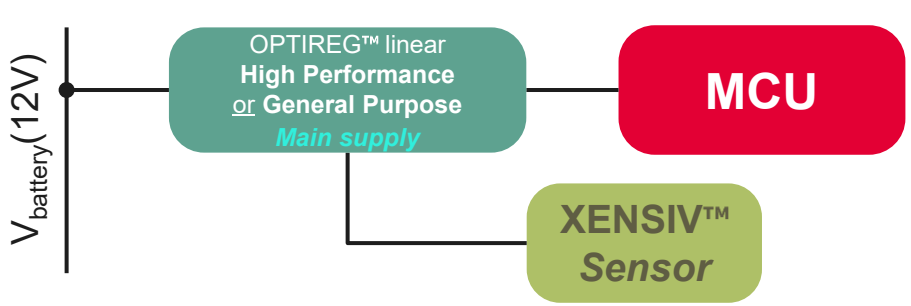

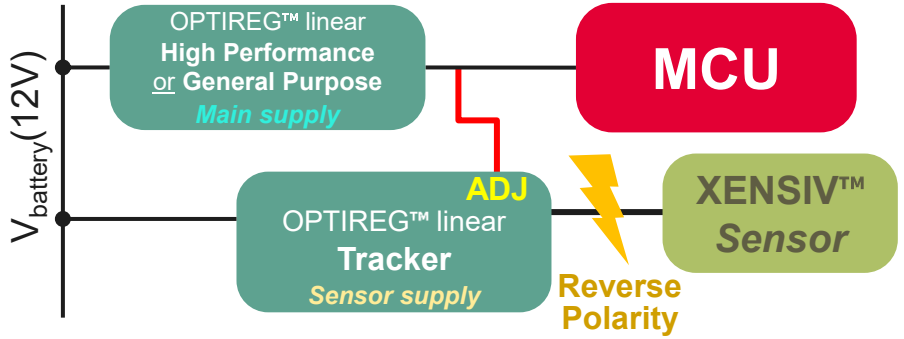

Only **Digital** Sensors (non-ratiometric)	**Fixed** Output Voltage with **lower** Accuracy (~ 2%)	**Accuracy**	High **Tracking** Output Voltage **Accuracy** (~ 0.1%) Trackers
Only **On-board** Sensors	Protection often missing against short-circuits	**Protection**	Protection against **short-circuits**, **overvoltage,** or **reverse polarity** Trackers

- Mandatory for **analog** Sensors (ratiometric)
- Works for **digital** Sensors (non-ratiometric)

- Mandatory for **analog** Sensors (ratiometric)
- Works for **digital** Sensors (non-ratiometric) (“satellite”)

Copyright © Infineon Technologies AG 2026. All rights reserved.

New TLS1xxx Tracker family
We bring the Tracker performance to the next level!

Trackers

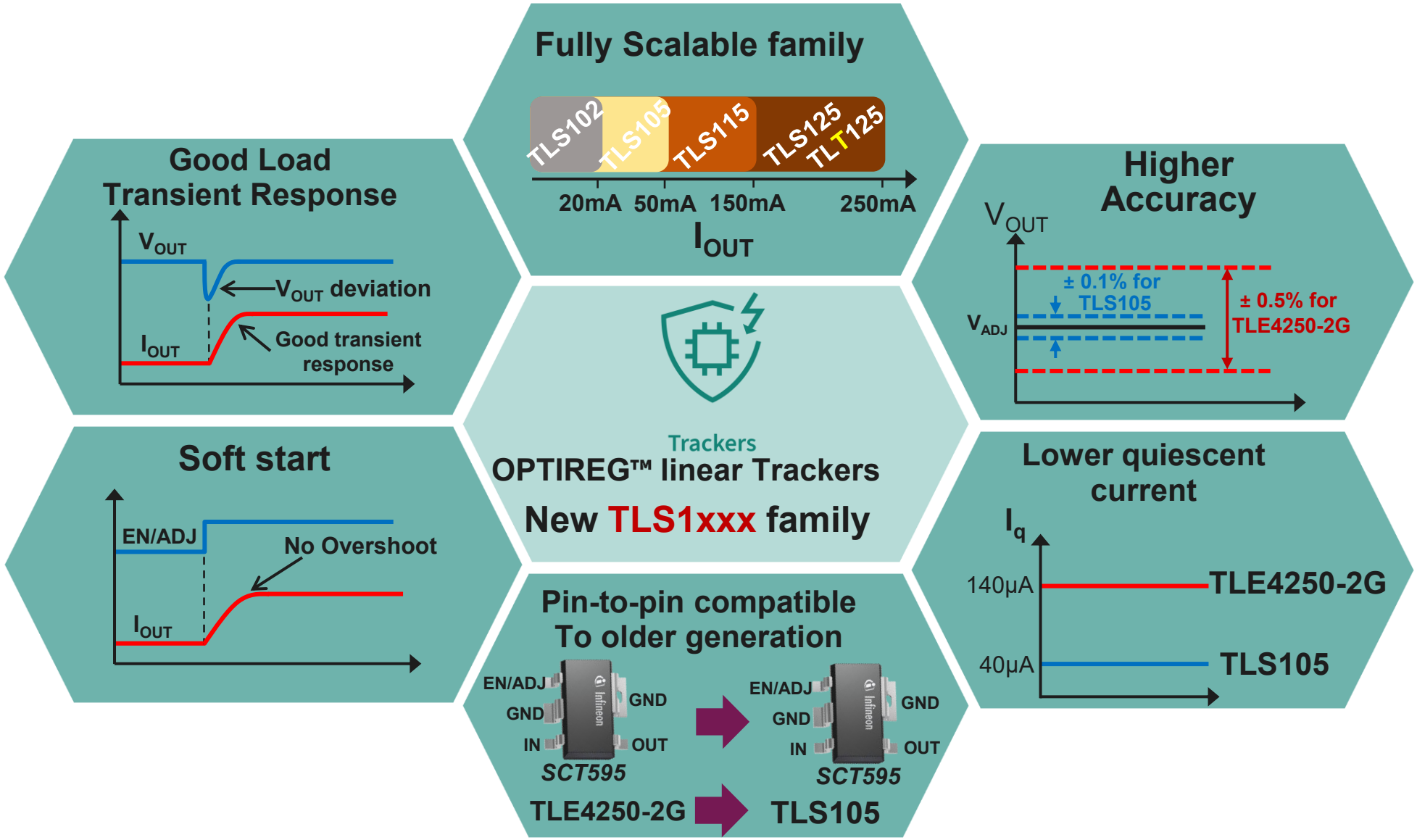

Copyright © Infineon Technologies AG 2026. All rights reserved.

OPTIREG™ linear Tracker family
A fully scalable family with the broadest portfolio on the market

Trackers

Alt. Pkg. Alternative Package

- **EN** : Enable
- **ADJ** : Reference Voltage
- **EN/ADJ** : Single pin for Enable + Reference
- **FB** : Feedback
- **PG** : Power Good








PG-SCT595
A*=2.9 x 1.6 mm²
R_{thJA}**= ~ 85°C/W

PG-TSON-10
A*=3.3 x 3.3 mm²
R_{thJA}**= ~ 60°C/W

PG-DSO-8
A*= 5 x 4 mm²
R_{thJA}**=~ 110°C/W

PG-DSO-8-EP
A*=5 x 4 mm²
R_{thJA}**= ~ 50°C/W

PG-TO252-x
A*=6.5 x 6.2 mm²
R_{thJA}**= ~ 30°C/W

PG-TO263-x
A*=10 x 9.3mm²
R_{thJA}**= ~ 20°C/W

* **A** = **Body Area** : Length x Width

** R_{thJA} : **Thermal Resistance** Junction to ambient on FR4 2s2p board

x :**PG-252** and **PG-263** Packages are available in **3-pin**, **5-pin** and **7-pin** variants

Next Gen. Next Generation

Device maximum output current ($I_{out,max}$)

Feature Set	20 mA	50 mA	70 mA	150 mA	250 mA	400 mA
– EN/ADJ	TLS102B0MB Accuracy 0.1%	TLE4250-2G Accuracy 0.5%; TLS105B0MB Accuracy 0.1% (Next Gen.)				
– EN – ADJ				TLS115B0LD Accuracy 0.1%; TLS115B0EJ Accuracy 0.1% (Alt. Pkg.)	TLE4252D Accuracy 0.2%	TLE4251D Accuracy 0.2%; TLE4251G Accuracy 0.2% (Alt. Pkg.)
– EN/ADJ – FB			TLE4254GA Accuracy 0.1%; TLE4254EJ A Accuracy 0.1% (Alt. Pkg.)		TLE4253GS Accuracy 0.2%; TLE4253E Accuracy 0.2% (Alt. Pkg.)	
– EN/ADJ – PG			TLE4254GS Accuracy 0.1%; TLE4254EJ S Accuracy 0.1% (Alt. Pkg.)			
– EN – ADJ – PG				TLS115D0LD Accuracy 0.1%; TLS115D0EJ Accuracy 0.1% (Alt. Pkg.)	TLS125D0EJ Accuracy 0.1%; TLT125D0EJ Accuracy 0.1%	Tj,max = 160°C

Click on the part to access its website

Copyright © Infineon Technologies AG 2026. All rights reserved.

Post Regulators

OPTIREG™ linear *Post Regulators*

Linear post regulators

Key features	Customer benefits
– Lower value of max input voltage, compared to a battery connected LDO; supplied by a Pre Regulator (e.g. a DC/DC converter)	– The combined usage of a Pre regulator and Post Regulators significantly improves the system efficiency, compared to a solution with linear LDO only
– Excellent PSRR (noise immunity)	– By employing a post regulator (linear regulator), after a switch-mode regulator, the system can significantly reduce electrical noise and ripple, providing a cleaner power supply
– Housed in smaller packages, compared to battery connected LDO (ex. tiny SCT-595 for 150mA)	– Post regulators handle smaller voltage drops, which reduce the heat generated, especially when combined with an initial high-efficiency Pre Regulator. This is beneficial for thermal management and space saving in compact or high-performance designs.

Enable, Reset				TLS208D1EJ Vxx	
Enable	TLS202BMB Vxx	TLS203B0EJ Vxx	TLS205B0EJ Vxx		TLF1963TE
Always on	TLS202A1MBV				
$I_{out,max}$ (mA)	150	300	500	800	1500

Applications

- Autonomous driving
- Telematics
- Infotainment
- Transmission
- Body Comfort

Copyright © Infineon Technologies AG 2026. All rights reserved.

If you need to supply a voltage rail in post-regulator topology, then get your OPTIREG™ linear Post Regulator LDO

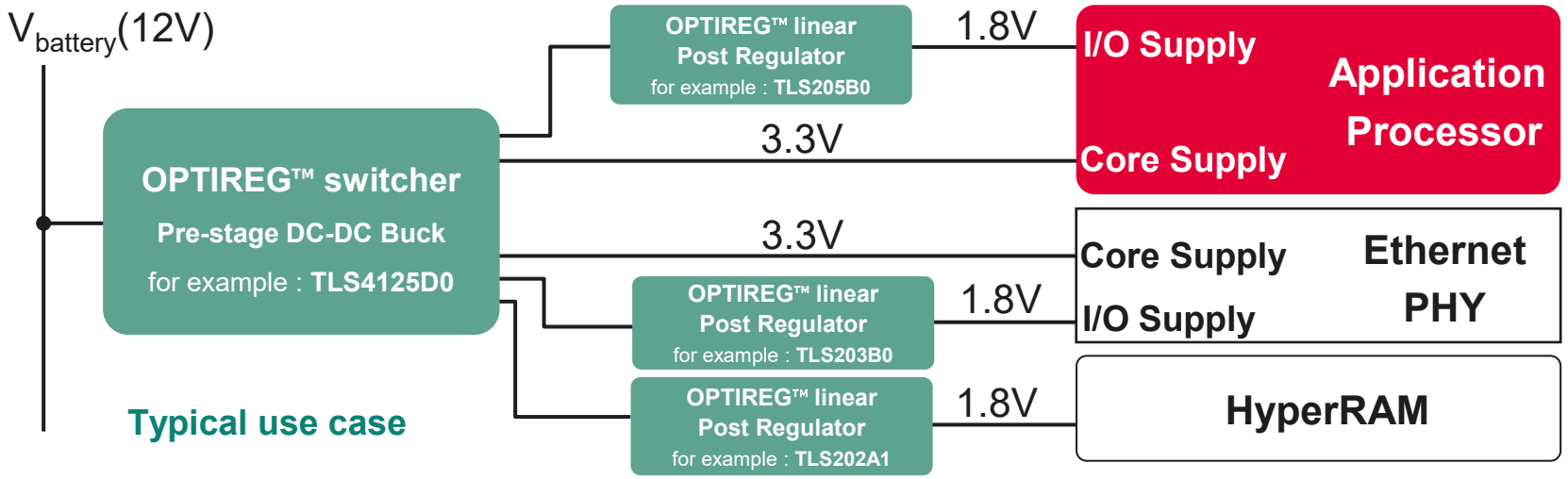

Typical use case

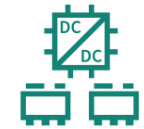

Linear post regulators

TLS2xx
TLF1963

Target applications



Topology

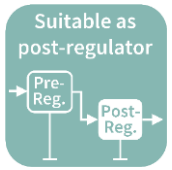

Best suited to supply

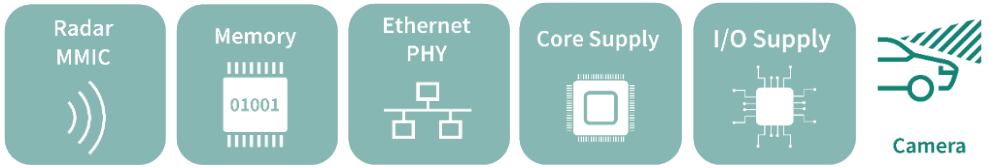

Also suitable to supply

Cluster Supply
Low noise supply

Feature set

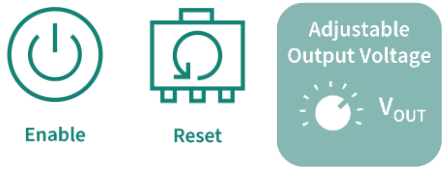

Key strengths

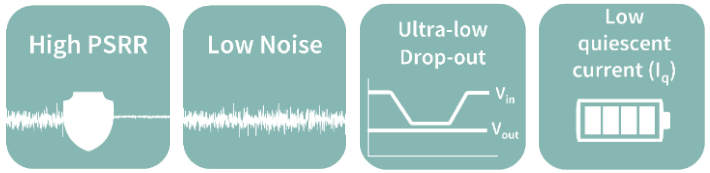

Temperature Range

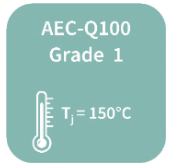

Unique differentiators



Copyright © Infineon Technologies AG 2026. All rights reserved.

OPTIREG™ linear Post Regulator Family
Choosing your Post Regulator has never been simpler!

Linear post regulators

5V **Fixed** output Voltage V_{OUT} = **5V**

3.3V **Fixed** output Voltage V_{OUT} = **3.3V**

ADJ **Adjustable** output Voltage



PG-SCT595
A*=2.9 x 1.6 mm²
R_{thJA}**= ~ 85°C/W



PG-DSO-8-EP
A*=5 x 4 mm²
R_{thJA}**= ~ 50°C/W



PG-TO252-x
A*=6.5 x 6.2 mm²
R_{thJA}**= ~ 30°C/W

* **A** = **Body Area** : Length x Width

** R_{thJA} : **Thermal Resistance** Junction to ambient on FR4 2s2p board

-x :**PG-252** and **PG-263** Packages are available in **3-pin**, **5-pin** and **7-pin** variants

Feature Set	Device maximum output current ($I_{out,max}$)				
	150 mA	300 mA	500 mA	800 mA	1500 mA
Always On	**TLS202A1MBV** ADJ				
Enable	**TLS202B1MB Vxx** 3.3V 5V	**TLS203B0EJ Vxx** 3.3V 5V ADJ	**TLS205B0EJ Vxx** 3.3V 5V ADJ		**TLF1963TE** ADJ
Reset				**TLS208D1EJ Vxx** 3.3V ADJ	

Click on the part to access its website

Copyright © Infineon Technologies AG 2026. All rights reserved.

Application specific

OPTIREG™ linear *Application Specific (LDO with current sense)*

Ideal for active antenna supply

Application specifics

Key features	Customer benefits
– Adjustable current limitation through an external resistor	– The ability to adjust output current limitation provides a robust and flexible solution, increasing reliability and safety. Optimized power consumption extends active antenna lifetime
– Integrated current sensing and monitoring, with high level accuracy	– Capability of monitoring faults and antenna status display; integrated solution saves external components; early fault detection enhances stability and safety
– Current level scalability (200, 300 and 400mA)	– It offers the flexibility to adapt the same solution to antennas with different power levels
– Dual channel family component with sense multiplexing capability (CSOx pin)	– Space saving compared to one channel solution; the presence of CSOx pin addresses efficiently the possibility of monitoring multiple devices with a single ADC connection

Dual channel				TLF4477-3LA
Single Channel	TLF4277EL	TLF4277-2EL TLF4277-2LD	TLF4277-2EP	
$I_{out,max}$ (mA)	200	300	400	600

Applications

- Car antenna
- Camera
- Telematics
- Infotainment
- Autonomous driving

Copyright © Infineon Technologies AG 2026. All rights reserved.

If you need an LDO with current sense, advanced monitoring and reverse polarity protection, then get an LDO of the Application Specific family

Typical use case

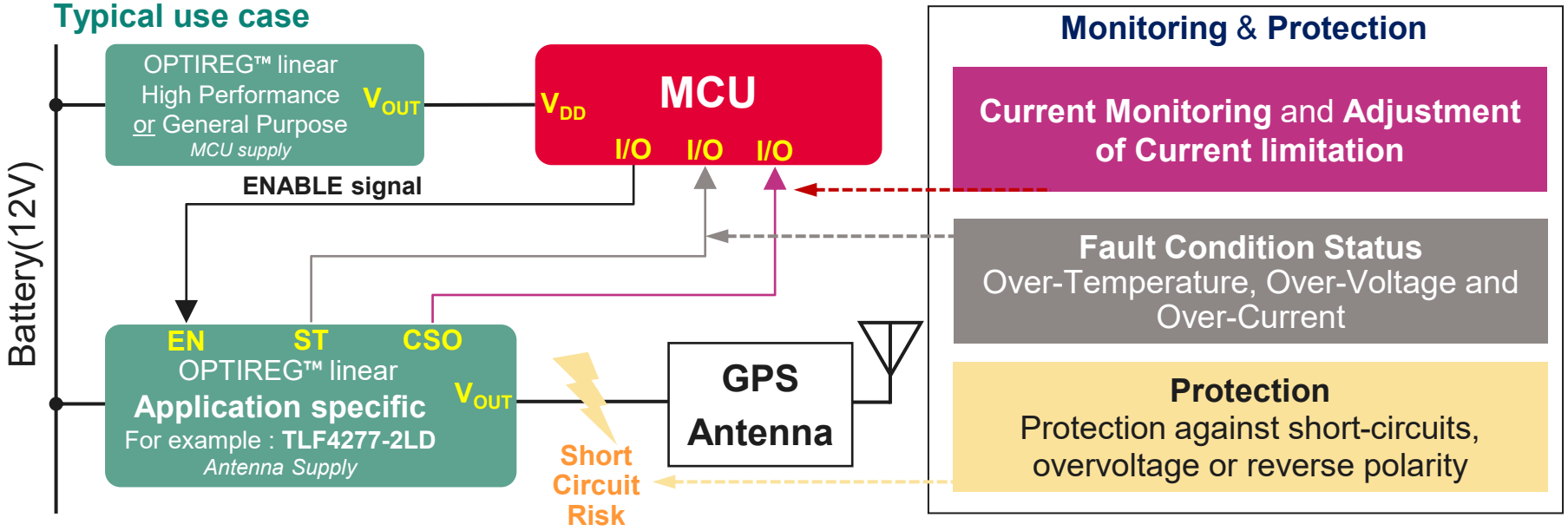





TLF**4**277xx (single channel)
TLF**4**477xx (dual channel)

Target applications



Topology

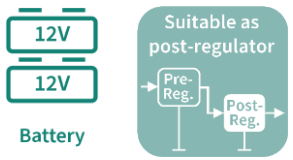

Best suited to supply

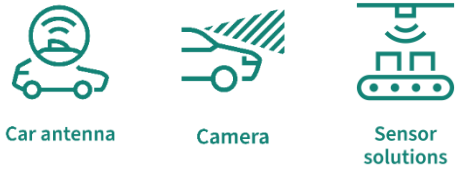

Also suitable to supply



Unique differentiators



Feature set

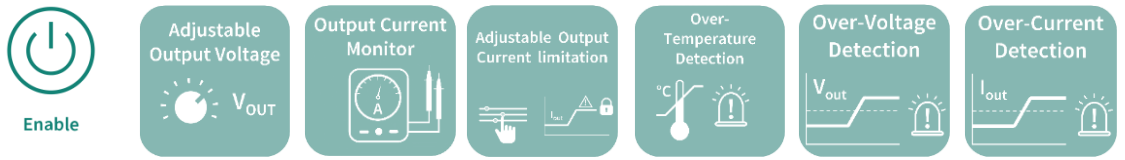

Key strengths

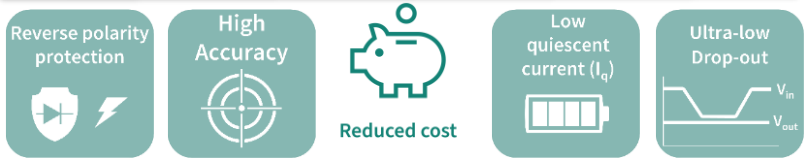

Temperature Range

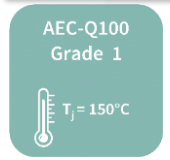

Copyright © Infineon Technologies AG 2026. All rights reserved.

OPTIREG™ linear Application specific

Scalable Family of LDOs with Current Sense, monitoring & Protection

Active Antenna






PG-TSON-10	PG-TSON-14	PG-SSOP-14	PG-TSDSO-14
A*=3.3 x 3.3 mm²	A*= 4.5 x 3 mm²	A*=4.9 x 3.9 mm²	A*=4.9 x 3.9 mm²
R_{thJA}**= ~ 60°C/W	R_{thJA}**= ~ 45°C/W	R_{thJA}**= ~ 45°C/W	R_{thJA}**= ~ 45°C/W

* **A** = **Body Area** : Length x Width

** R_{thJA} : **Thermal Resistance** Junction to ambient on FR4 2s2p board

Application specifics

Output Channel	Device maximum output current ($I_{out,max}$)			
	200 mA	300 mA	400 mA	600 mA (300mA / Channel)
Single Output Channel	Newer Generation → **TLF4277EL** Adjustable V_{OUT}	**TLF4277-2EL** Adjustable V_{OUT}	**TLF4277-2EP** Adjustable V_{OUT}	
		TLF4277-2LD Adjustable V_{OUT} (Alternative Packages)		
Dual Output Channel				**TLF4477-3LA** Adjustable V_{OUT}

Click on the part to access its website

Copyright © Infineon Technologies AG 2026. All rights reserved.

OPTIREG™ 24V LDOs for Truck and CAV Applications

24V LDO | Application specifics

Battery | Truck | CAV



PG-TSDSO-14
A*=4.9 x 3.9 mm²
R_{thJA}**= ~ 45°C/W



PG-DSO-14
A*=8.65 x 3.9 mm²
R_{thJA}**= ~ 63°C/W



PG-TO252-x
A*=6.5 x 6.2 mm²
R_{thJA}**= ~ 30°C/W



PG-TO263-x
A*=10 x 9.3mm²
R_{thJA}**= ~ 20°C/W



PG-DSO-20
A*=15.9 x 11mm²
R_{thJA}= ~ 17°C/W

* **A** = **Body Area** : Length x Width

** R_{thJA} : **Thermal Resistance** Junction to ambient on FR4 2s2p board

-x :**PG-252** and **PG-263** Packages are available in **3-pin**, **5-pin** and **7-pin** variants

5V **Fixed V_{OUT} = 5V**

ADJ **Adjustable V_{OUT}**

LDO

Single Output

Multiple Output

Feature Set

Enable

TLT807B0EPV
- $I_{OUT,MAX}$ = **70mA**
- **Adjustable V_{OUT}**
- OV Protection up to **58V (<400ms)**

TLE4476D
2-Channel
- OUTPUT 1 : **350mA , 3.3V**
- OUTPUT 2 **: 430mA , 5V**
- OV Protection up to **65V (<400ms)**

Reset

TLE4267GM
- $I_{OUT,MAX}$ = **400mA ; Fixed 5V** V_{OUT}
- OV Protection up to **60V (<400ms)**

TLE4267G
- $I_{OUT,MAX}$ = **400mA ; Fixed 5V** V_{OUT}
- OV Protection up to **60V (<400ms)**

TLE4270-2D
- $I_{OUT,MAX}$ = **650mA ; Fixed 5V** V_{OUT}
- OV Protection up to **65V (<400ms)**

TLE4270-2G
- $I_{OUT,MAX}$ = **650mA ; Fixed 5V** V_{OUT}
- OV Protection up to **65V (<400ms)**

Watchdog

TLE4271-2G
- $I_{OUT,MAX}$ = **650mA**
- **Fixed 5V** V_{OUT}
- OV Protection up to **65V (<400ms)**

TLE4471G
3-Channel
- OUTPUT 1 : **450mA , 5V**
- OUTPUT 2 **: 100mA , Tracking V_{OUT}**
- OUTPUT 3 **: 50mA , Tracking V_{OUT}**
- OV Protection up to **60V (<400ms)**

Click on the part to access its website

Copyright © Infineon Technologies AG 2026. All rights reserved.

Cross-selling

Mapping of OPTIREG™ with various microcontrollers
Find the right OPTIREG™ for your microcontroller in just a few clicks!

Scan

Click

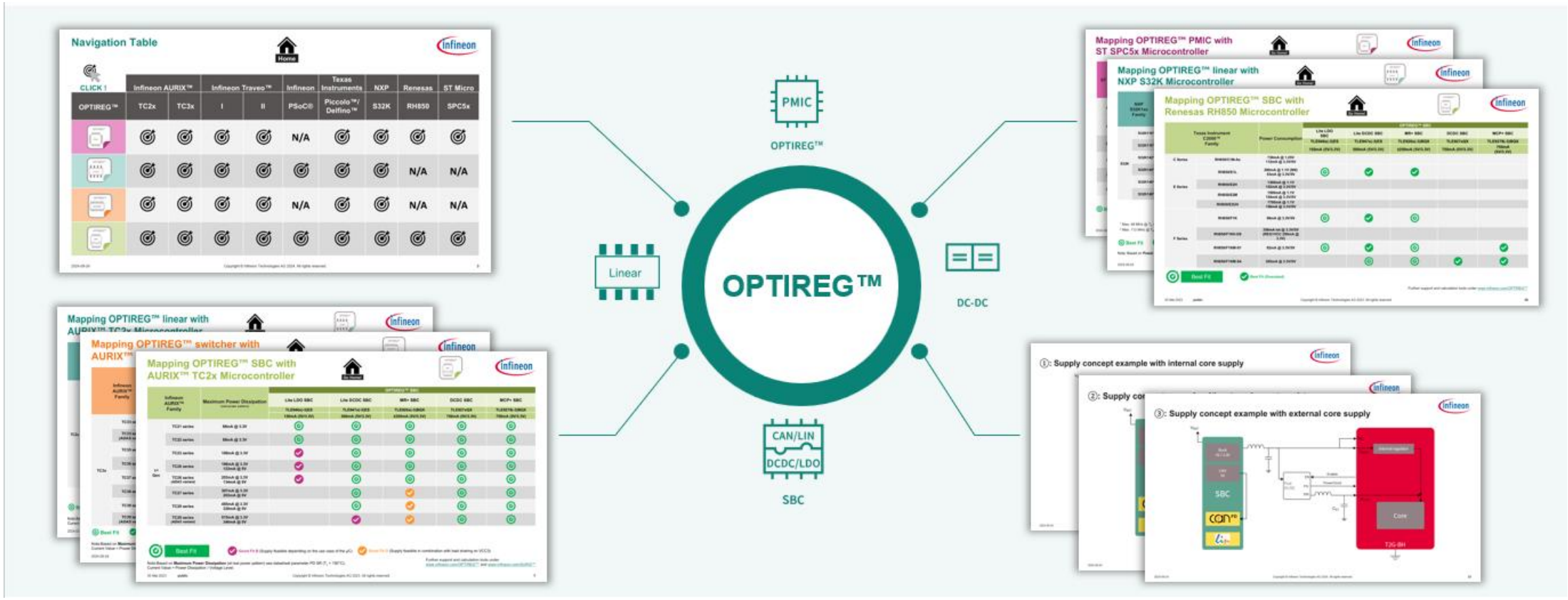

Copyright © Infineon Technologies AG 2026. All rights reserved.

Mapping of OPTIREG™ with various microcontrollers
Find the right OPTIREG™ for your microcontroller in just a few clicks!

Scan

Click

	Infineon AURIX™		Infineon Traveo™		Infineon	Texas Instruments	NXP	Renesas	ST Micro
OPTIREG™	TC2x	TC3x	I	II	PSoC®	Piccolo™/ Delfino™	S32K	RH850	SPC5x
					N/A				
								N/A	N/A
					N/A			N/A	N/A
									

Copyright © Infineon Technologies AG 2026. All rights reserved.

Mapping of OPTIREG™ linear with Transceivers
Find the right OPTIREG™ for your Transceiver in just a few clicks!

Scan

Click

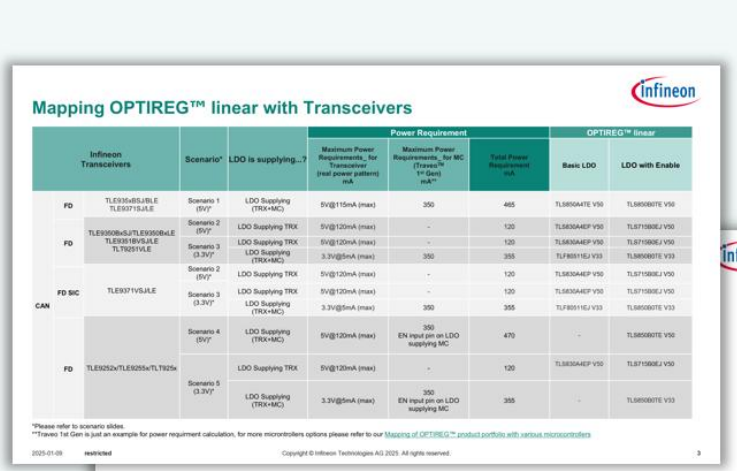

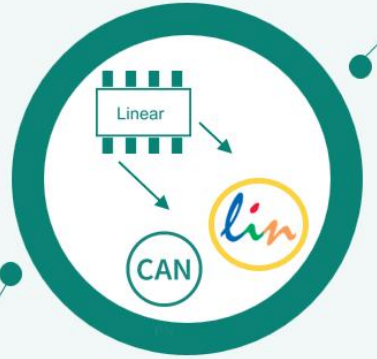

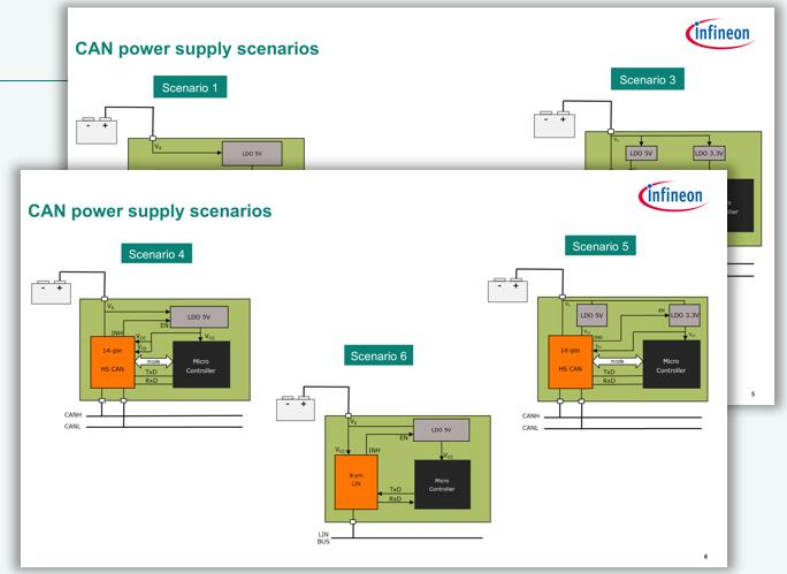

Copyright © Infineon Technologies AG 2026. All rights reserved.

Mapping of OPTIREG™ linear with various sensors

High performances

Trackers

Body			Powertrain									Safety			
Pneumatic Seat Comfort	General		Engine Management (ECU)			Fuel Injection			Inverters		Battery Management	Transmission	Electric power steering (EPS)		Braking / ABS	Airbag / Pedestrian protection
Barometric Press. Sensors	Magnet. position sensors (Non RM)	3D Magnet. sensors (Non RM)	Barometric Press. sensors	Engine Speed sensors (Non RM)	Linear Hall Magnet. Position (RM)	Engine Speed sensors (Non RM)	Manifold Pressure sensors (RM)	Angle sensor (Non RM)	Current sensors (Non RM)	Angle sensors (Non RM)	Barometric Pressure Sensors	Trans. speed sensor (Non RM)	Linear Hall Magne. Position (RM)	Angle Sensors (Non RM)	Wheel speed sensor (Non RM)	Side Airbag / Pedestrian Protect. Sensors (Non RM)
KP236 N6165 (RM) KP466 KP466P (non RM) TLS805 TLS810 TLS710 TLS715 TLE429x TLE425x TLS1xx	TLE4961 TLE4966 TLE4946 TLE4964 TLS805 TLS810 TLS710 TLS715 TLE429x TLE425x TLS1xx	TLE493D TLE425x TLS1xx TLE429x	KP234 (RM) KP464 KP464E (non RM) TLS805 TLS810 TLS710 TLS715 TLE429x TLE425x TLS1xx	TLE498x TLE425x TLS1xx TLE429x	TLE4997 TLS1xx	TLE492x TLE425x TLS1xx TLE429x	KP21x KP22x KP27x TLS1xx	TLE502 TLE425x TLS1xx TLE429x	TLI427x TLE425x TLS1xx TLE429x	TLE5309 TLE5009 TLE5012 TLE5014 TLE425x TLS1xx TLE429x	KP23x (RM) KP466P KP467 (non RM) TLS805 TLS810 TLS710 TLS715 TLE429x TLE425x TLS1xx	TLE495x TLE494x TLS805 TLS810 TLS710 TLS715 TLE429x TLE425x TLS1xx	TLE4997 TLS1xx	TLE5309 TLE425x TLS1xx TLE429x TLE5012 TLE5013 TLE5014 TLS805 TLS810 TLS710 TLS715 TLE429x TLE425x TLS1xx	TLE494x TLE504x TLE425x TLS1xx TLE429x	KP200 KP201 KP204 TLS805 TLS810 TLS710 TLS715 TLE429x TLE425x TLS1xx

*RM = Ratiometric – requires OPTIREG™ tracker

Legend: Power supply for On ECU(on board)

Power supply for Off ECU("Satellite")

Copyright © Infineon Technologies AG 2026. All rights reserved.

Trainings

OPTIREG™ linear trainings

Training name	Content
OPTIREG™ linear: Introduction to Infineon's automotive linear voltage regulators	Get to know OPTIREG™ linear product portfolio. Be familiar with the overall categories, the main characteristics of each sub-family, and their unique features and benefits. Additionally, you will learn about the target application areas for each sub-family, enabling you to make informed decisions about the most suitable products for their needs.
How OPTIREG™ Linear supplies active antennas	This training covers: Exploring the OPTIREG™ product portfolio and OPTIREG™ Linear Application Specific products can meet active antenna supply needs.
Infineon´s OPTIREG™ linear	Get to know the product families of the OPTIREG™ linear voltage regulators in this video.
OPTIREG™ Linear Tracker: Infineon's family of automotive voltage trackers	This training covers: exploring the OPTIREG™ product portfolio, bearing in mind that under each family and group there are multiple products that are constantly being improved and updated by Infineon. Then, we will take a look at the OPTIREG™ Tracker product group in more detail. Finally, we will explore the OPTIREG™ Linear naming.
OPTIREG™ Linear High Performance Automotive power supply ICs	This training covers: How Infineon's OPTIREG™ Linear portfolio is organized, an overview of the current market trends and main target applications, and an introduction to High-Performance Product family.
OPTIREG™ Linear: Infineon's automotive linear voltage regulators	OPTIREG™ is the perfect solution for automotive power supplies, as current automotive applications need to be small, efficient and reliable. They require low quiescent current and low dropout voltage to realize energy-efficient systems.

Click on the training title to access it

Copyright © Infineon Technologies AG 2026. All rights reserved.

OPTIREG™ linear trainings

Training name	Content
OPTIREG™ Linear Post Regulator	Get to know the OPTIREG™ Linear Post Regulator portfolio and its benefits. Understand the naming convention applied to these products and the future outlook for the OPTIREG™ Linear Post Regulator family.
OPTIREG™ linear: New Tracker (LDO) Generation TLS125D0EJ and TLT125D0EJ	Featuring the new 250mA Trackers with the first ever Automotive Tracker with Tjmax up to 160°C
Low voltage drop for better power efficiency in your LED system	The new BCR431U linear LED driver IC with low voltage drop enables notable efficiency gains in your LED system
Infineon´s OPTIREG™ Automotive Power Supply IC	Get to know the product families of the OPTIREG™ Power supply ICs Portfolio in this video.
OPTIREG™ Automotive Power Supply ICs	Infineon OPTIREG™ is the power supply IC solution for any automotive ECU.
Standalone automotive power supply ICs	High performance linear voltage regulators

Click on the training title to access it

Copyright © Infineon Technologies AG 2026. All rights reserved.

Supporting Tools & Documents

OPTIREG™ linear

To ensure optimal selection, we provide a detailed selection tool

Find the right LDO for your specifications in just a few clicks!

Click

Home / Finder & Selection Tools / Voltage Regulator Finder

Voltage Regulator Finder

Finder contains Simple and versatile low dropout linear voltage regulators from Infineon

↓ View products

About Products



Copyright © Infineon Technologies AG 2026. All rights reserved.

Device Naming Nomenclature

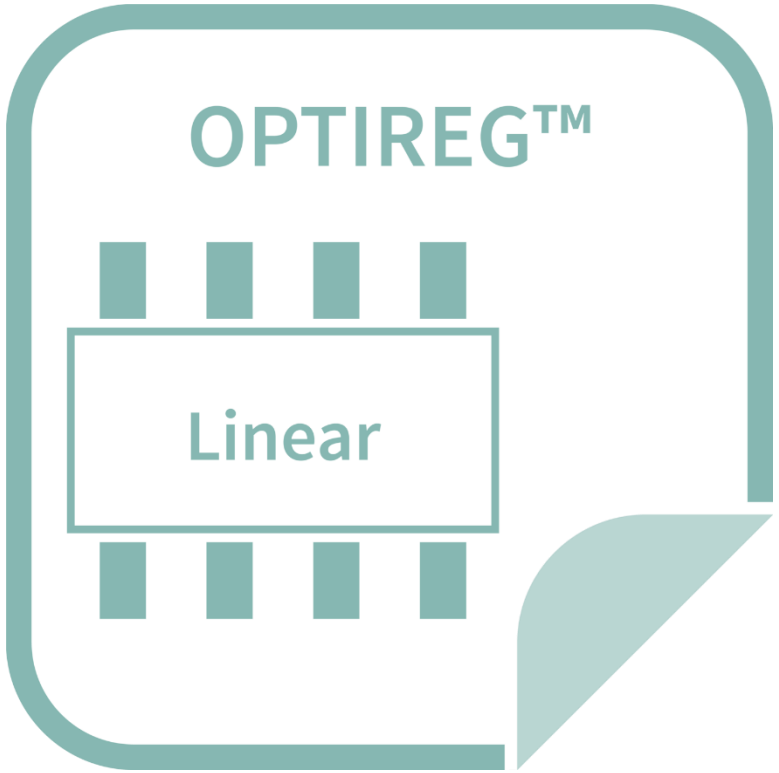

Device naming Nomenclature

Copyright © Infineon Technologies AG 2026. All rights reserved.

OPTIREG™ linear
Device naming nomenclature

This nomenclature is valid for the following **3 families** of OPTIREG™ linear



Linear post regulators



High performances



Trackers

D : digit
L : letter

TL **S** **T** **8** **2** **1** **DD** **L** **D** **LL** **V50** **V33** **VSE** **V**

Output type
S : Single
T : ENDURANCE

Family
8 : High Performance
2 : Post Regulator
1 : Tracker

Output Current
For High Performance & Tracker:
DD x 10mA
For Post Regulator:
DD x 100mA

Feature
A : Always on
B : EN
C : RES
D : EN + RES
E : RES + WD
F : EN + RES + WD
For Tracker:
D : EN + PG

Device Generation
0 : 1st generation
1 : 2nd generation
2 : 3rd generation
etc.

Package
MB : SCT595
LD : TSON-10
SJ : DSO-8
EJ : DSO-8-EP
EL : SSOP-14-EP
EP : PG-TSDSO-14
TE : PG-TO252
TA/TB : PG-TO263

For High performance & Post Regulator:
Output Voltage
V50 : 5V
V33 : 3.3V
VSE : Selectable 5V/3.3V
V : Adjustable
For Tracker:
No suffix : always adjustable!

Abbreviations and Terminology:			
	• **Always on :** Vin,Vout,Gnd (only)	• **EN :** Enable	• **RES :** Reset
	• **PG :** Power good	• **WD :** Watchdog	

Copyright © Infineon Technologies AG 2026. All rights reserved.

OPTIREG™ linear
Device naming nomenclature



High performances

TLS820F3EL V50

- **Single Output**
- **Family**
  8 : High Performance
- **Output Current**
  20 x 10mA = 200mA
- **Feature**
  F : EN + RES + WD
- **Device Generation**
  3 : 3rd generation
- **Package**
  EL : SSOP-14-EP
- **Output Voltage**
  V50 : 5V

Abbreviations and Terminology:	● **Always on :** Vin,Vout,GND	● **EN :** Enable	● **RES :** Reset
	● **PG :** Power good	● **WD :** Watchdog	

Copyright © Infineon Technologies AG 2026. All rights reserved.

OPTIREG™ linear
Device naming nomenclature



Linear post regulators

TLS205B0EJV

- **Single Output**
- **Family**
  2 : Post Regulator
- **Output Current**
  05 x 100mA = 500mA
- **Feature**
  B : EN
- **Device Generation**
  0 : 1st generation
- **Package**
  EJ : DSO8-EP
- **Output Voltage**
  V : Adjustable

Abbreviations and Terminology:	● **Always on :** Vin,Vout,GND	● **EN :** Enable	● **RES :** Reset
	● **PG :** Power good	● **WD :** Watchdog	

Copyright © Infineon Technologies AG 2026. All rights reserved.

OPTIREG™ linear
Device naming nomenclature

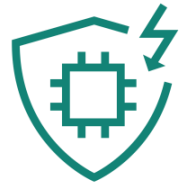

Trackers

TLS115D0EJ__

Single Output

Family
1 : Trackers

Output Current
15 x 10mA = 150mA

Feature
D : EN + PG

Device Generation
0 : 1st generation

Package
EJ : DSO-8-EP

Output Voltage
No Suffix : always adjustable for Trackers!

Abbreviations and Terminology:	• **Always on :** Vin,Vout,GND	• **EN :** Enable	• **RES :** Reset
	• **PG :** Power good	• **WD :** Watchdog	

Copyright © Infineon Technologies AG 2026. All rights reserved.


Infineon