

New CAN FD TLE935xBx from UMC

Infineon Automotive
November 2023

CAN FD TLE935xBx family


Transmission speed


Central gateway


Electric power steering


Transmission


Engine Management

Motivation

- Offer feature optimized CAN FD
- Transition to more complex topologies calls for fast and stable data throughput, CAN FD TLE935xBx family supports data transmission rates up to 5 MBit/s depending on the size of the network and the inherent parasitic effects.
- Extension of the voltage range to Vcc 4.5-5.5V and improved ESD robustness
- Offer best in Class robustness and life time due to higher mission profile

Key Benefits

- Very high ESD immunity paired with optimized RF immunity allows the use in automotive applications without any external protection device
- Higher Mission profile for longer life time and best in class robustness
- Protection of the microcontroller against interferences generated inside the network
- The CAN FD TLE935xBx family is backward compatible to existing CAN (FD) transceiver solutions
- Very low level of electromagnetic emission (EME) within a wide frequency range

Copyright © Infineon Technologies AG 2023. All rights reserved.

TLE935x goes UMC => TLE935xBx

- Qualified to fulfill 100% of all CAN FD & **Global** requirement: VeLIO (done for TLE9351BVSJ, other variants on-going) IBEE & SAE J2284A
- Suitable for **APAC & GC**
- Suitable for **EU** market => IBEE passed in Jan/20
- Suitable for **Americans** market SAE J2284A
- Backwards compatible with Infineon TLE625x, TLE725x, TLE825x, TLE925x,

Coming soon

Dresden Name Scheme	
V_{IO}	PG-DSO8
X	TLE9350SJ
✓	TLE9350VSJ
✓	TLE9350XSJ
✓	TLE9351VSJ
X	TLE9351SJ

Customer target schedule	
QS (DSO8)	Available
SOP (DSO8)	released

UMC Name Scheme	
V_{IO}	PG-DSO8
X	TLE9350BSJ
✓	TLE9350BVSJ
✓	TLE9350BXSJ
✓	TLE9351BVSJ
X	TLE9351BSJ

Customer target schedule	
QS (DSO8)	Q4/2023
SOP (DSO8)	Q4/2023

TLE935xBx (DSO-8) to be offered for all projects after Q4/2023CY

[Owner: ATV SP APS PMG Doc ID: Product Presentation Vers.: 2.0]

Copyright © Infineon Technologies AG 2023. All rights reserved.

Key differentiation features to DD variant incl. related package(s)

Deliverable 4:	Value Proposition UMC variant to DD variant	Page:	1/ 1

Feature	TLE935xBx (UMC)	TLE935x (DD)	Customer Value	Capability to meet Customer Value	
				Rating	Overall
Voltage range	4.5V-5.5V	4.75V-5.25V	- wider operating range - exact match with EOL SPT4 products		
Mission profile	3000h HTOL	2000h HTOL	- longevity - robustness - reliability		
Propagation delay	235ns	255ns	- faster communication loops		
Current consumption	18µA @5V STB	18µA@ 5V STB	- power efficiency		

Comments

- TLE935xBx scores higher in terms of improved robustness and life time not only vs.TLE935x (but also with standard testing 2000h HTOL)
- Wider operating range makes TLE9350BSJ/TLE9350BSJ perfectly suitable for replacement of the EOL SPT4 products
- Propagation delay improvement vs. TLE935x
- Current consumption still higher than competition (however best in class when sending a DOM bit on the bus)

[Owner: ATV SP APS PMG Doc ID: Product Presentation Vers.: 2.0]

Copyright © Infineon Technologies AG 2023. All rights reserved.

NPI / Launch on track

Deliverable 6:	Market Introduction Plan	Page:	1/ 2

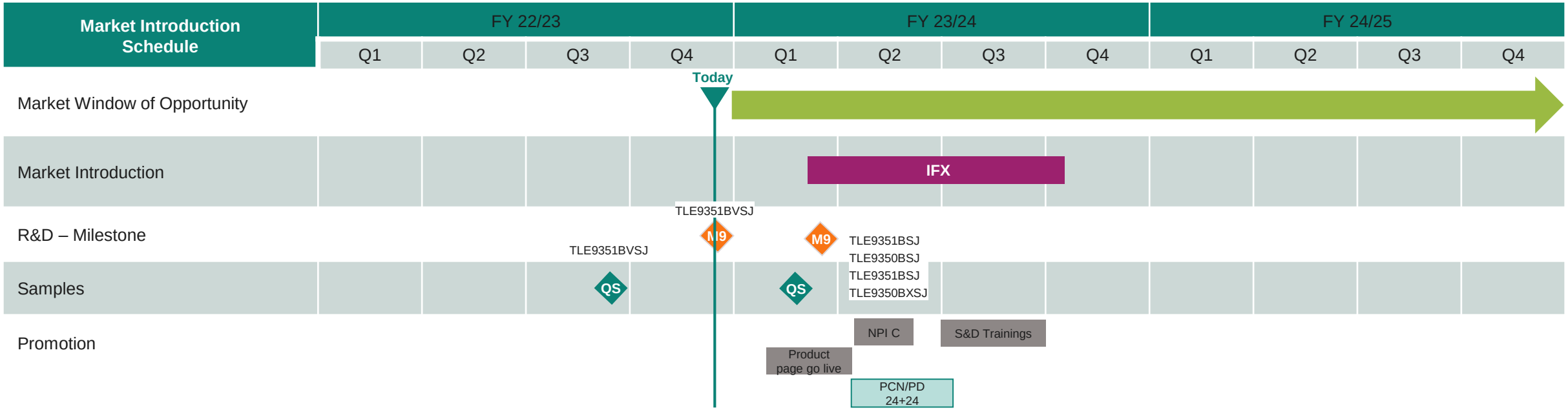

Sampling

- QS available in ISaR of all 5 variants by Dec 2023
- TLE9351BVSJ STD samples already available in ISaR

Comments

- Data Sheet ready
- Sample stocking & NPI letter @Distri Feb 2024 for TLE9351BVSJ
- Sample stocking & NPI letter @Distri E/June ^^^^^^^^^^^^^^^^^^^^^^^^2024 for other variants
- Sales/Distribution training Q2 23/24

[Owner: ATV SP APS PMG Doc ID: Product Presentation Vers.: 2.0]

Copyright © Infineon Technologies AG 2023. All rights reserved.

CAN FD TLE935*B-family at a glance

Main Features

- Loop delay symmetry for CAN FD data frames up to 5 Mbit/s
- Standby mode with minimized quiescent current
- Available in DSO-8
- VIO input for voltage adaption to the microcontroller interface (3.3 V or 5 V)
- Lowest current consumption in the stand-by mode
- Very low CAN bus leakage current in power-down state
- Bus wake-up pattern (WUP) with optimized filter time for ww OEM usage
- Overtemperature protection
- Protected against automotive transients according to ISO 7637 and SAE J2962-2

Key Benefits

- Protection of the microcontroller against interferences generated inside the network
- Longer life time and robustness due to the higher mission profile
- Use in automotive applications without additional protection devices, such as suppressor diodes
- Very low level of electromagnetic emission (EME) within a wide frequency range
- Very low CAN bus leakage current in power-down state
- Transmitter Supply Voltage 4.5 – 5.5 V

Block Diagram

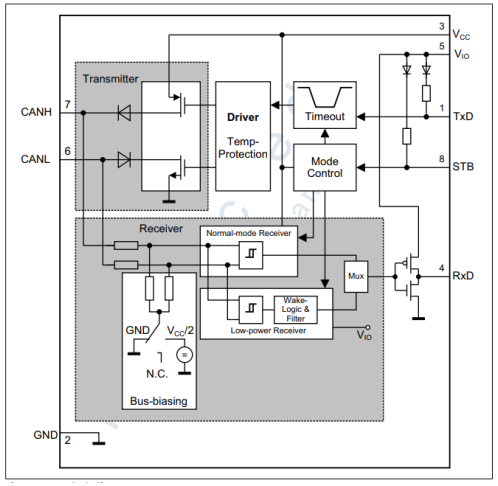



Applications

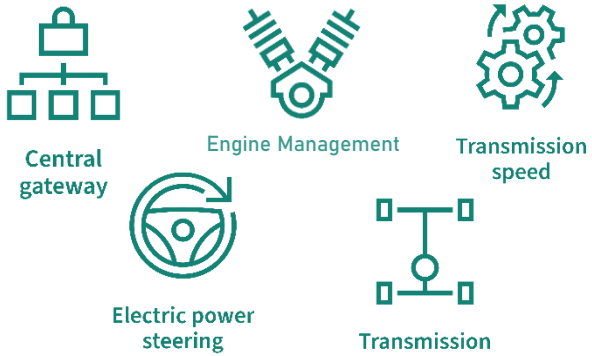

Coming soon
QS samples
TLE9351BVSJ
available

[Owner: ATV SP APS PMG Doc ID: Product Presentation Vers.: 2.0]

Copyright © Infineon Technologies AG 2023. All rights reserved.

CAN FD match customer system needs

Microcontroller	
› Microcontroller	› AURIX™, Traveo™

Linear Voltage Regulators	
› OPTIREG™	› all LDOs pending on 5V or 3.3V µC: TLS850x, TLS820x, TLS810x, TLS805x, TLE4678-2LD,…

System Basis Chip	
› OPTIREG™ SBC	› TLE9461, TLE9471, TLE927x, TLE926x...

CAN FD SIC Transceivers	
› CAN FD flexible date rate up to 5MBit/s	› **TLE9350BSJ** › **TLE9350BVSJ** › **TLE9350BXSJ** › **TLE9351BSJ** › **TLE9351BVSJ**

LIN Transceivers	
› High-end and BASIC LIN › LIN LDO	› TLE7257SJ, TLE7258SJ, TLE7259-3x › TLE8457x

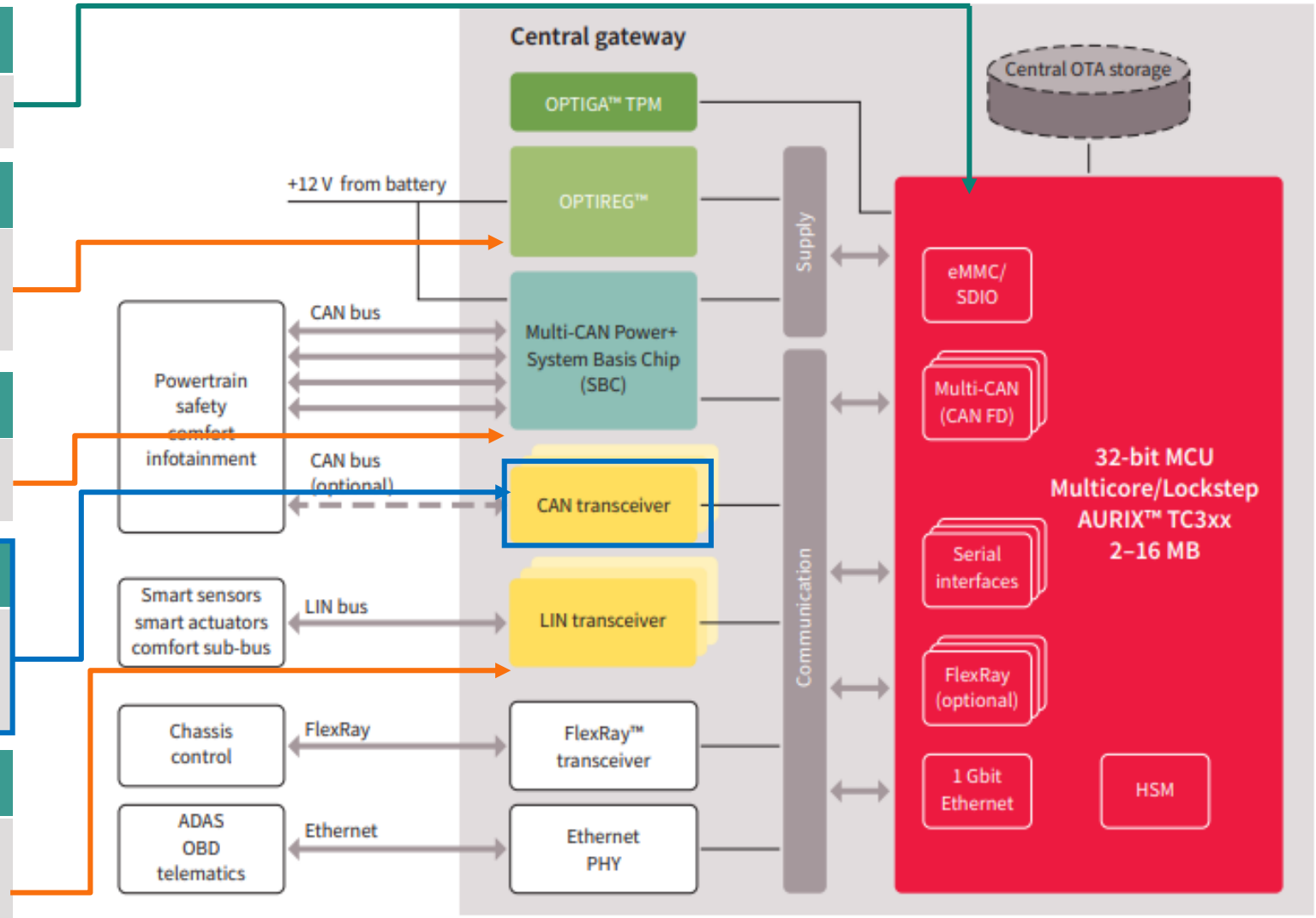

Copyright © Infineon Technologies AG 2023. All rights reserved.

CAN FD TLE935xBx family
At a Glance

CAN FD	Package	Features
TLE9350BSJ	DSO-8	w/o bus wake-up, no Vio pin, power-save mode and receive-only mode
TLE9350BVSJ	DSO-8	w/o bus wake-up with Vio pin, power-save mode
TLE9350BXSJ	DSO-8	w/o bus wake-up, with Vio pin, receive-only mode
TLE9351BSJ	DSO-8	with bus wake-up, no Vio pin, stand-by mode
TLE9351BVSJ	DSO-8	with bus wake-up, with Vio pin, stand-by mode

The TLE935xBx products with

- Extended Voltage range 4.5V-5.5V
- Higher mission profile
- Improved ESD robustness
- Low power mode with wake-up function
- Very low quiescent current

[Owner: ATV SP APS PMG Doc ID: Product Presentation Vers.: 2.0]

Copyright © Infineon Technologies AG 2023. All rights reserved.

CAN FD – Easy Change from Old to New CANs

CAN Classic & CAN 2MB becomes CAN FD

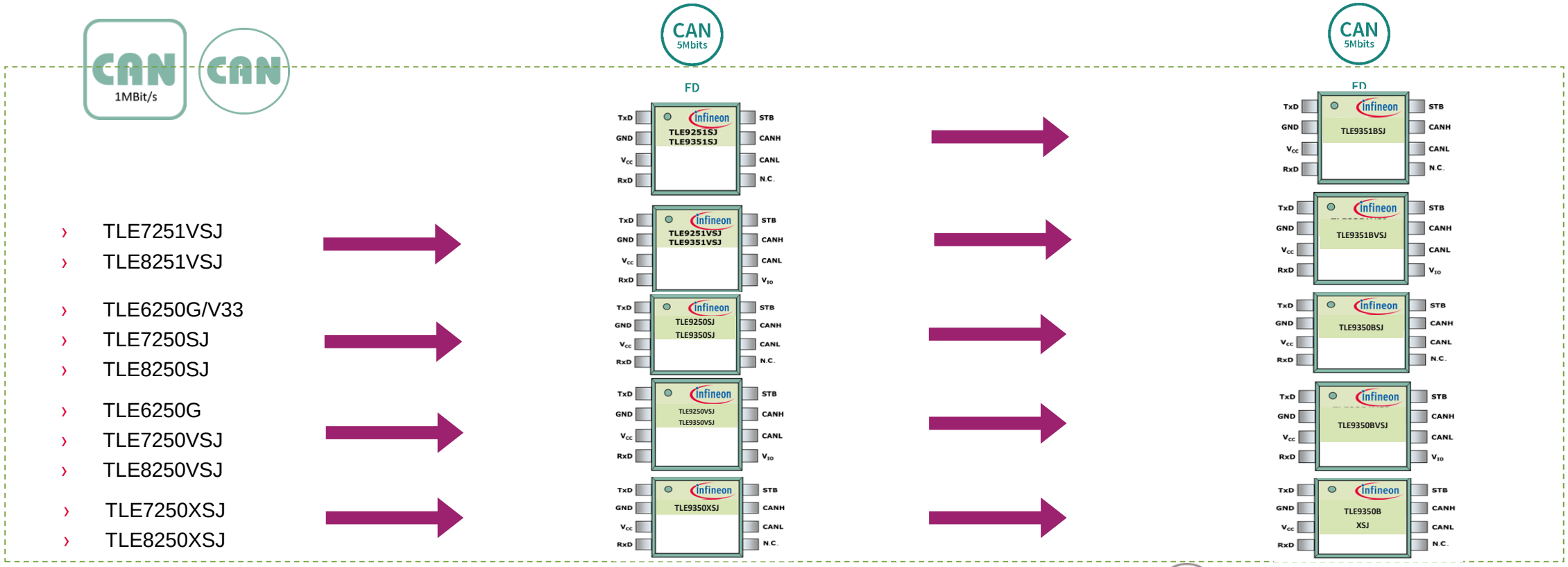

- TLE7251VSJ
- TLE8251VSJ
- TLE6250G/V33
- TLE7250SJ
- TLE8250SJ
- TLE6250G
- TLE7250VSJ
- TLE8250VSJ
- TLE7250XSJ
- TLE8250XSJ

CAN FD variants are backwards compatible to 1MBit/s, 2Mit/s and 5MBit/s

CAN FD variants fulfill latest standard ISO 11898-2:2016

[Owner: ATV SP APS PMG Doc ID: Product Presentation Vers.: 2.0]

Copyright © Infineon Technologies AG 2023. All rights reserved.

CAN FD TLE9350Bx
Product Brief

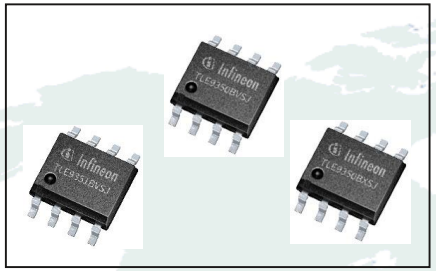

Description

CAN FD Transceiver

CAN 5Mbits FD

TLE9350BSJ TLE9350BVSJ TLE9350BXSJ	PG-DSO-8

Main Features

- Fully compliant to ISO 11898-2:2016 and SAE J2284-4/-5
- Loop delay symmetry for CAN FD data frames up to 5 MBit/s
- Very low electromagnetic emission (EME) allows the use without additional common mode choke
- V_{IO} input for voltage adaption to the microcontroller interface (3.3 V or 5 V)
- Excellent ESD robustness
- TxD time-out function
- Very low CAN bus leakage current in power-down state
- Overtemperature protection
- Protected against automotive transients according to ISO 7637 and SAE J2962-2
- Receive-only mode ensuring the bus in the recessive level with the receiver enabled and transmitter disabled states to not disrupt the network communication
- Power-save mode with low current consumption
- Green Product (RoHS compliant)

- **Applications**

Central gateway | Engine Management | Transmission speed | Electric power steering | Transmission

PINOUT TLE9350Bx in DSO-8

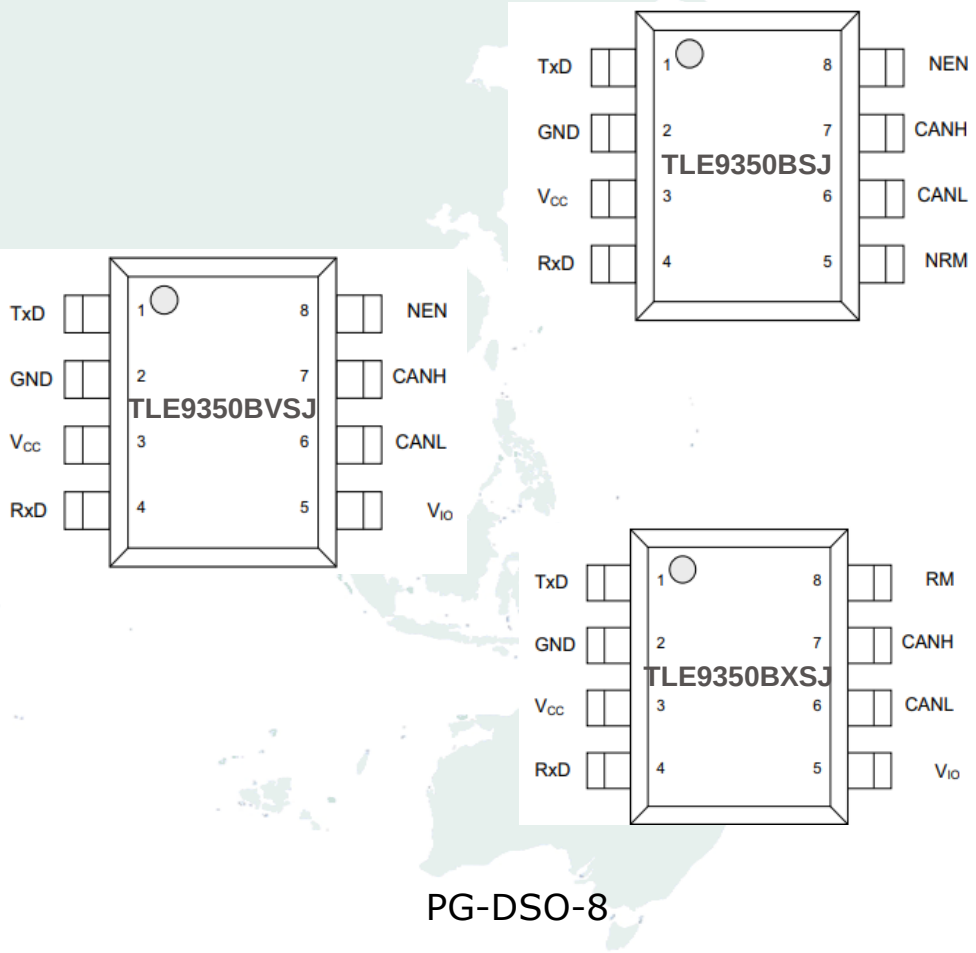

PG-DSO-8

[Owner: ATV SP APS PMG Doc ID: Product Presentation Vers.: 2.0]

Copyright © Infineon Technologies AG 2023. All rights reserved.

CAN FD TLE9351Bx
Product Brief



Description

CAN FD Transceiver

TLE9351BSJ TLE9351BVSJ	PG-DSO-8

Main Features

- Fully compliant to ISO 11898-2:2016 and SAE J2284-4/-5
- Loop delay symmetry for CAN FD data frames up to 5 MBit/s
- Very low electromagnetic emission (EME) allows the use without additional common mode choke
- V_{IO} input for voltage adaption to the microcontroller interface (3.3 V or 5 V)
- Bus wake-up pattern (WUP) function with optimized filter time for worldwide OEM usage
- Stand-by mode with minimized quiescent current
- Transmitter supply V_{CC} can be disabled in stand-by mode to further minimize quiescent current
- Excellent ESD robustness
- TxD time-out function
- Very low CAN bus leakage current in power-down state
- Overtemperature protection
- Protected against automotive transients according to ISO 7637 and SAE J2962-2
- Green Product (RoHS compliant

- **Applications**

Central gateway | Engine Management | Transmission speed | Electric power steering | Transmission

PINOUT TLE9351Bx in DSO-8

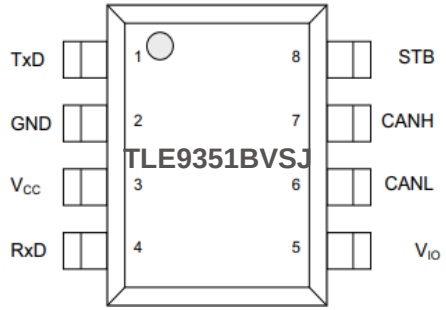

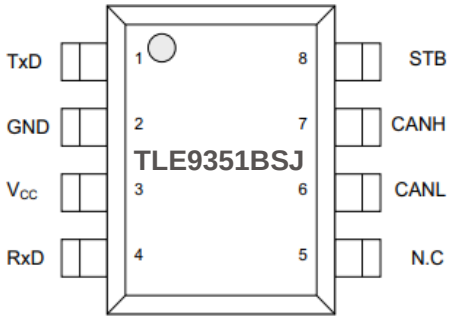

PG-DSO-8

[Owner: ATV SP APS PMG Doc ID: Product Presentation Vers.: 2.0]

Copyright © Infineon Technologies AG 2023. All rights reserved.

CAN FD TLE935xBx
Conclusion and Outlook

- The TLE935xBx fulfills even stringent EMC test limits without an additional external circuit, such as a suppressor diode, and has successfully passed IBEE test.
- The higher mission profile grants longer life time and best in class robustness.
- The low power modes supporting bus wake-up features ensures the device indication about its activity to the host controller, and also preventing false wake-ups indication because of a timeout implementation.
- The transmitter technology combined with the optimized receiver symmetry enables the TLE935xBx to support CAN FD data frames with transmission rates up to 5 MBit/s dependent on the size of the network and the inherent parasitic effects
- Extended voltage range 4.5V-5.5V allows for wider operating range and is a perfect match to our discontinued SPT4 products
- Fail-safe features like TxD time-out ensures the network communication not to be affected by a local node failure, and undervoltage detection feature ensures the protection of the device
- Improved propagation delay with 235ns (vs. Dresden 255ns) stands for better communication loop dependent on the network topology

[Owner: ATV SP APS PMG Doc ID: Product Presentation Vers.: 2.0]

Copyright © Infineon Technologies AG 2023. All rights reserved.


Infineon