

MOTIX™ TLE9189 gate driver ICs for functional safety-related BLDC motor applications

Infineon Technologies
Automotive Smart Power | Motor Control Solutions

Automotive qualified MOTIX™ gate driver ICs for BLDC motors from Infineon - portfolio overview

24/ 48V BLDC

MOTIX™ TLE9180D-32QK, TLE9140EQW



Pumps | Engine cooling fan | Suspension | eBike | eMotorcycle | CAV | eClimate compressor | eTurbo | Belt starter generator | Integrated starter generator

12V BLDC

MOTIX™ TLE9563x, TLE9564x, TLE9185x

MOTIX™ TLE9180Dx, TLE9183QK, TLE9188x, TLE9189x

NEW



Pumps | Fans | HVAC blower | Engine cooling fan | Transfer case | Double clutch transmission | Variable valve control | Electric power steering | Brake booster

Copyright © Infineon Technologies AG 2025. All rights reserved.

ISO 26262-compliant BLDC motor control application example with MOTIX™ TLE9189 gate driver IC

Driver stage

- MOTIX™ gate driver ICs for BLDC motors
- TLE9189QVW (VQFN-48)
- TLE9189QUW (TQFP-48)

MOSFETs

- OptiMOS™ 6 40 V MOSFETs
- E.g. IAUC120N04S6N006

Microcontroller

- 32-bit AURIX™ TriCore™ microcontroller
- E.g. AURIX™ TC364

Power Supply

- OPTIREG™ power management IC (PMIC)
- E.g OPTIREG™ TLF35585

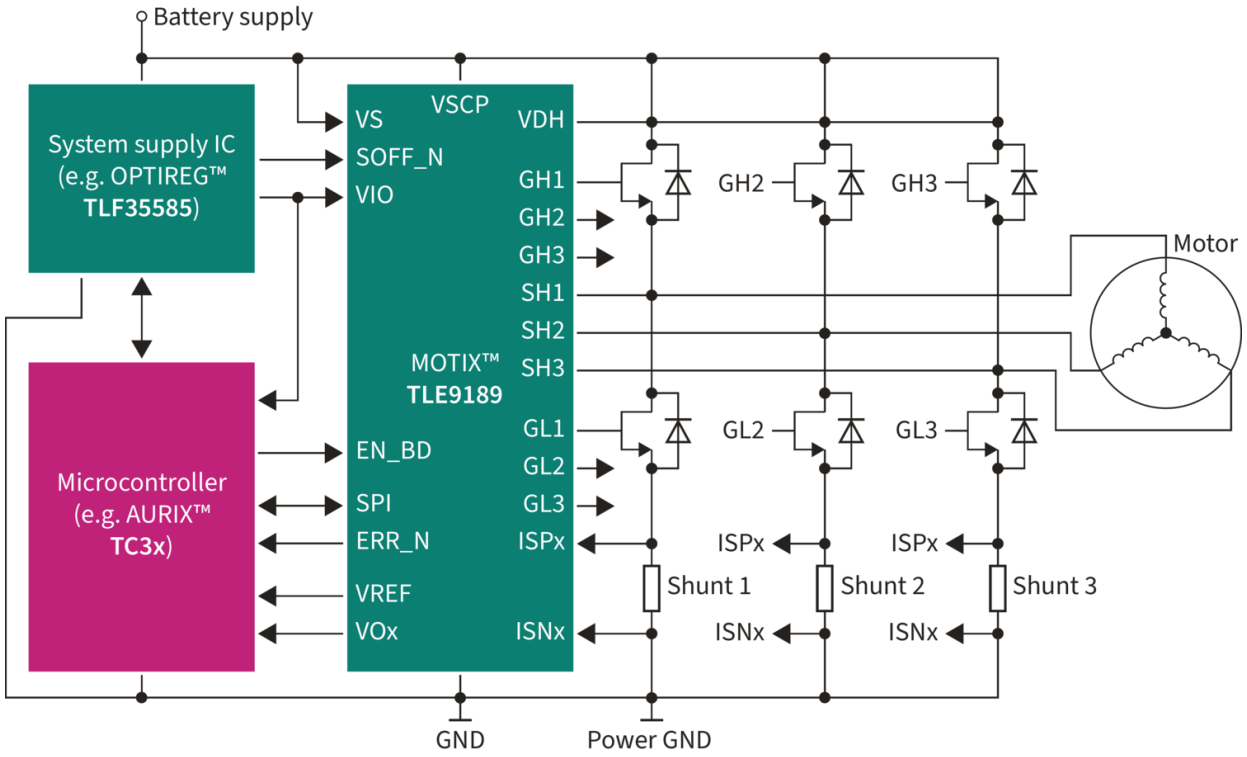

Copyright © Infineon Technologies AG 2025. All rights reserved.

Target applications

MOTIX™ TLE9189 gate driver ICs for BLDC motors

ISO 26262-compliant (ASIL D) 3-phase gate driver ICs for functional safety-related 12 V BLDC motor applications



Braking
Brake-by-wire



Electric power steering
Steer-by-wire

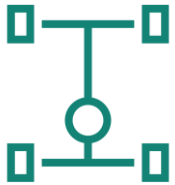

Transmission



BLDC motor

Motivation

- Rise in “by-wire” solutions (e.g. brake- or steer-by-wire) that are entirely dependent on the electronic system’s reliability, availability, security and robustness
- Innovative and cost optimized solution for functional safety applications needed for enabling easy handling of sophisticated devices

Product description

- Three phase gate driver IC with 200 nC driving capability per MOSFET with conventional motor control concept consisting of PWM input and three integrated current sense amplifiers for accurate current sensing on LS
- Many integrated features e.g. for protection & diagnosis, Infineon’s patented adaptive MOSFET control concept & current controlled output stages as well as divers other safety related functionalities

Copyright © Infineon Technologies AG 2025. All rights reserved.

MOTIX™ TLE9189x gate driver ICs
Addressing 12 V BLDC motor applications with ASIL D rating

Main Features

- Drives 6 MOSFETs up to Q_{Gtot} **= 200 nC at 20 kHz**
- **Adaptive MOSFET control**
- **Supply** voltage range of **4.2 V to 36 V**
- **0...100% duty cycle** adjustable without restrictions
- **Motor control** concept with PWM input
- Motor connection pins rated **-12 V for transients**
- **3 current sense CSAs** with 1.5 µs settle time and ±1% accuracy
- **Precise configurable** reference voltage for CSA
- **Comprehensive monitoring and diagnostic** functions
  - Motor brake function
  - Phase-FB & PWM alternation monitoring
  - SPI CRC check, BISTs, off-state open short detection (bridge failure test), watchdog
  - Over-temp., -voltages, -currents and many more



VQFN-48 (7x7 mm²)



TQFP-48
(9x9 mm²)

ISO 26262 compliant

Application Diagram

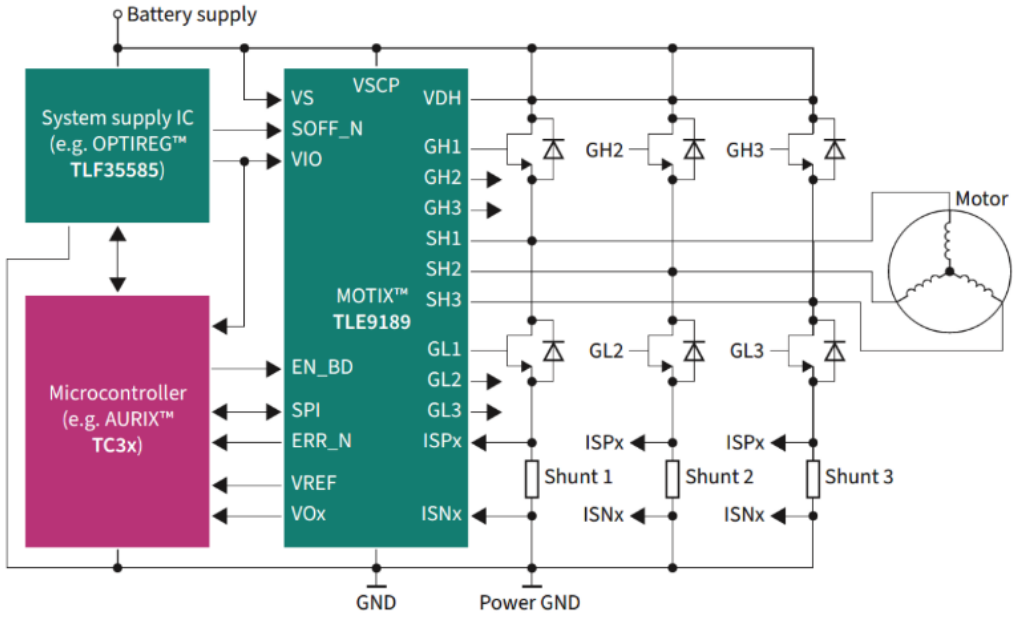

Key Benefits

- **Low system cost** due to reduced external components needed
- **Operating down** to low voltages **4.2 V**
- **Flexible configurability** of monitoring and failure behavior
- Extended temperature range AEC-Q100 (**Grade 0**)
- ISO 26262-compliant **(ASIL D)**

Target Applications

- Electric power steering
- Brake booster
- Safety related applications

Copyright © Infineon Technologies AG 2025. All rights reserved.

Key features and benefits

Key features	Key benefits	Value
Adaptive MOSFET control feature integrated into gate driver	– Can improve EMC performance, reduce power losses and achieve target switching time	Highest efficiency and power density
Configurable failure reactions incl. unique motor brake function	– In case of battery voltage propagation the output stage and motor is protected	
Comprehensive protection & diagnostic features integrated	– Multiple thresholds and filter timings are configurable via SPI	Optimized system costs and PCB space
Optimized feature set in small VQFN-48 and TQFP-48 pin package	– Reduce number of external components and reduced system costs	
Automotive grade 0 qualified & ASIL D complaint	– Tailored for functional safety applications and the severe conditions in automotive	High system reliability, availability, security and robustness

Copyright © Infineon Technologies AG 2025. All rights reserved.

MOTIX™ TLE9189 gate driver ICs: Design support

AEC Qualified

ISO 26262 compliant

MOTIX™ TLE9189 gate driver ICs for BLDC motors
Overview collaterals, software and design tools

Technical documents	Status
Product overview	online
Datasheet*	on request
User manual*	on request
AN: External component failure assessment*	on request
AN: Start up guide*	on request
AN: Hardware design guideline*	on request
AN: Diagnostic in OFF*	on request
AN: Adaptive gate current control*	on request
AN: Simplified internal pin circuit*	on request
AN: Charge pump usage*	on request
Doc: External phase cut off circuit proposal*	on request

www.infineon.com/bldc-motor-gate-driver-ics

* Please consider NDA restrictions for TLE9189 collaterals, software and design tools and contact you regional Infineon sales partner in order to get access to restricted information.

Hardware	Status
Evaluation Kits (+ User Guide)	online

Software*	Status
Complex Device Driver	on request

Design and simulation tools*	Status
Configuration Wizard: TLE9189 GUI (+User Guide)	on request
Configuration Wizard: Gate current settings	on request
PSpice model	on request

Other's*	Status
Safety manual	on request
EMC test report (A13)	on request
Power dissipation calculation sheet	on request
CSA accuracy calculation sheet	on request

Copyright © Infineon Technologies AG 2025. All rights reserved.

MOTIX™ Software - TC3xx_CDD_9189
Complex Device Driver (CDD) for MOTIX™ TLE9189 gate driver ICs

Main Features

- Abstracts logical **TLE9189 functionality** to software level
- Access to AURIX™ hardware using **MCAL** (SPI, DIO, ICU)
- Supports up to **two TLE9189**
- Access to complex functions by **simple API** calls
  - Initialization and configuration
  - Functional clustering in groups
  - External safety mechanisms
  - Error detection and reporting
  - Cyclical execution of user-requests

Standards

- AUTOSAR conform interface ASR4.4.0
- Automotive SPICE assessed
- Developed according to ISO 26262 ASIL D
- CERT C compliance

Key benefits

- Enables rapid prototyping and shorter development times
  - Simplified integration
  - Reduced complexity in application SW
  - 6 months free source code evaluation

Supported microcontroller

- AURIX™ TC3xx-family

SW top level architecture

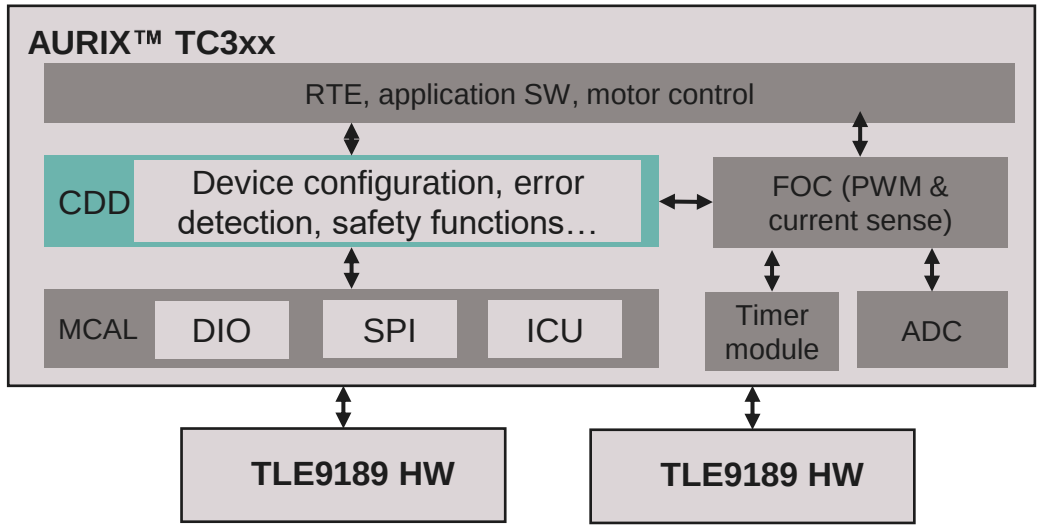

Supported tools

- Tresos
- TASKING 6.3r1p2 or HighTec GNU 4.9.4.1

Quality level: Software Product

Status: Available in the Infineon Developer Center (IDC)

Copyright © Infineon Technologies AG 2025. All rights reserved.

TC3xx_CDD_9189 key benefits



Abstracts logical TLE9189 functionality to software level for a simplified and easy GDU configuration and control



Infineon as a single source for both hardware & software solutions



Enables faster HW evaluation and shortens overall development time

Copyright © Infineon Technologies AG 2025. All rights reserved.

Hardware evaluation made easy with MOTIX™ TLE9189 evaluation kit

Available in ISAR!

Block Diagram

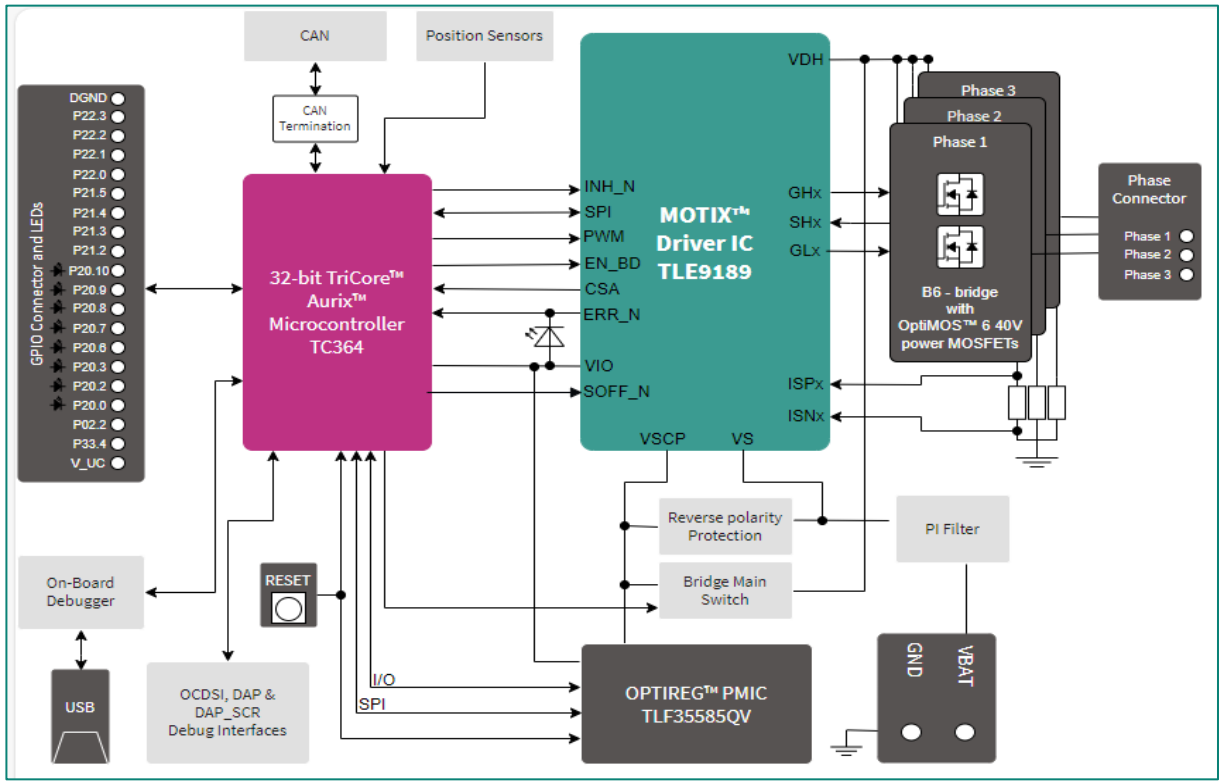

Description

This evaluation kit provides a flexible, easy-to-use prototyping and development tool for evaluating and testing Infineon's TLE9189 gate driver IC.

Key Features

- Designed for 3-phase BLDC motors
- Plug & play for easy evaluation TLE9189 features e.g. adaptive MOSFET control, self test, complete registers access and with spin motor option
- B6 bridge onboard for direct motor connection
- Sensor interfaces for motor position: TMR, HALL, Encoder (no SW)
- Test points for easy measurement (eg. motor, analog signal etc.)
- Graphical user interface (GUI) available for board control via Infineon Developer Center (IDC)*

*Request GUI access via you regional Infineon sales partner

Copyright © Infineon Technologies AG 2025. All rights reserved.

Summary: Why select Infineon MOTIX™ solutions

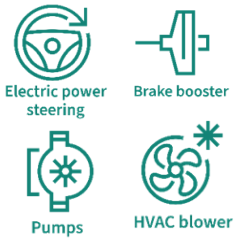

Product offering for diverse set of automotive applications

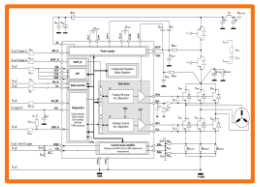

Enable cost competitive systems

- Reduced BOM for external components
- Reduced thermal losses (TLE956x/TLE918x)

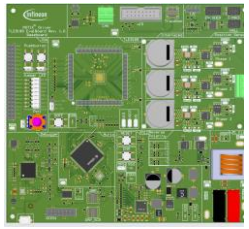

Reduced engineering efforts

- SW (DD/CDD) available at same time as our silicon
- Comprehensive collateral package
- Offering scalable12 V/ 24 V/ 48 V variants to reduce SW efforts



Secured supply chain

- Combination of inhouse and external partners

High Quality

- Robust components for safety related applications such as EPS, braking
- Trusted partner for our customers since several 4 product generations (+20 years experience)

ISO 26262 compliant

Safety

- Strong safety organization
- IFX engaged with OEMs on several x-by-wire projects and diversity concepts

Copyright © Infineon Technologies AG 2025. All rights reserved.


Infineon