

Infineon‘s latest Automotive MOSFET advancement: OptiMOS™ 5 80V Dual Gate MOSFET in TOLL package

The Best of two MOSFET types in one package!

ATV MOS PM PMG
September 2024

restricted

OptiMOS™ 5 80V TOLL Dual Gate Automotive MOSFET
Infineon innovation: The Best of two MOSFET types in one package!

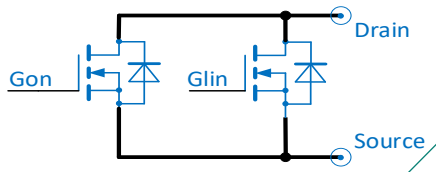

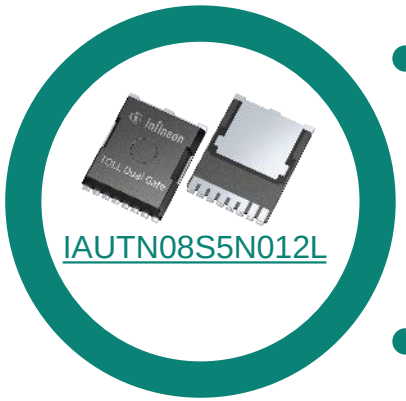

- 2 MOSFET types in one package
- LINFET to switch slow or limit current
- ONFET for low R_{DSon} steady state
- 2 Gate pins; independent control

- Minimize EMI by slow switching
- Limit in-rush current
- Clamp for over-voltage protection
- Minimize steady-state conduction losses

- Possible system cost savings
- replace two FETs with one
- eliminate TVS diodes,
- eliminate components in pre-charging circuit

- Eval Board – PSPICE models - App Note





- Focus Apps:









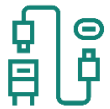









Copyright © Infineon Technologies AG 2024. All rights reserved.

Infineon's new Dual Gate automotive MOSFET - IAUTN08S5N012L
The Best of two MOSFET types in one package!

Schematic

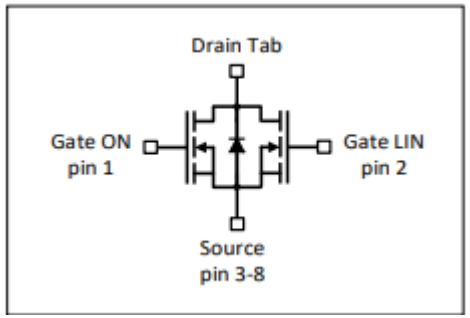

Package / Pin Out

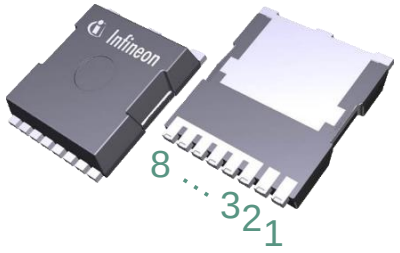

Concept

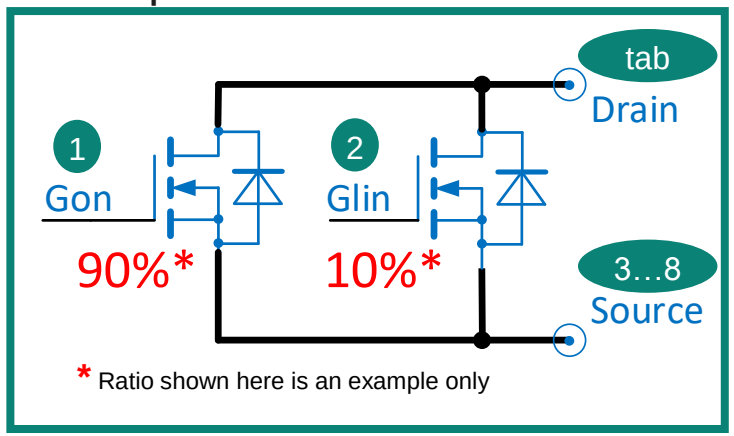

ONFET mode key characteristics

$R_{DS(on)}$ = 1.15mΩ max.

$V_{GS,ON}$=10V, $V_{GS,LIN}$=10V, I_D=100A

R_{thJC} = 0.40K/W max.

LINFET mode key characteristics

$R_{DS(on)}$ = 9.0mΩ max.

$V_{GS,ON}$=0V, $V_{GS,LIN}$=10V, I_D=5A

R_{thJC} = 0.40K/W max.

3 Safe operating area ONFET and LINFET

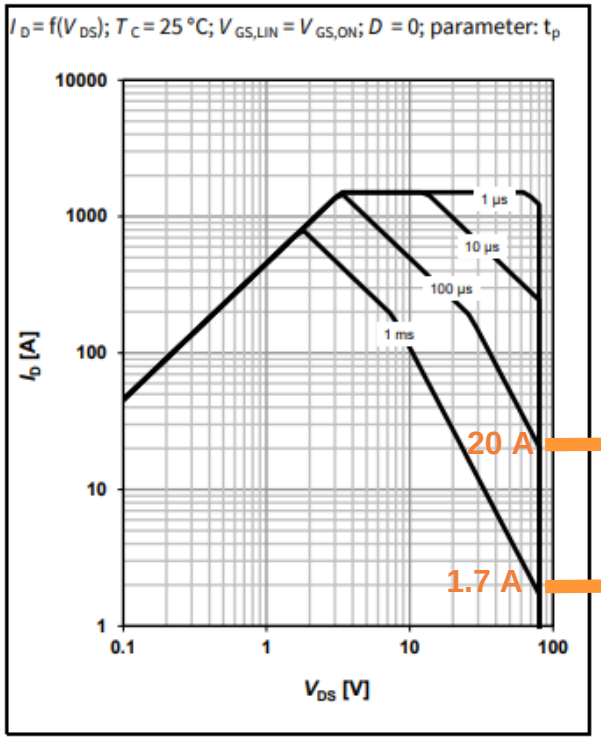

100µs

1ms

SOA significantly larger at high V_{DS} voltage drop

18 Safe operating area LINFET

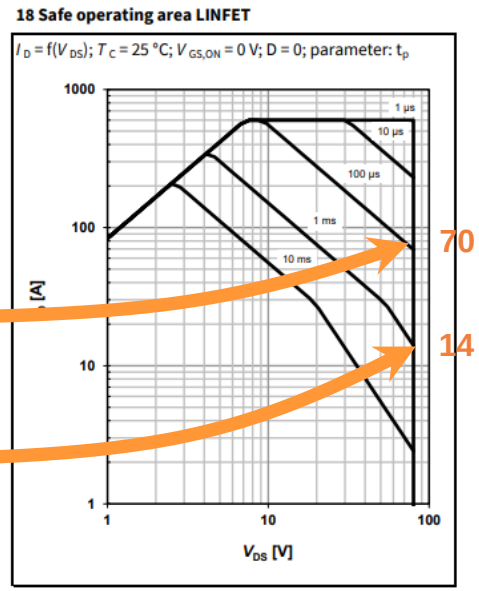

Preliminary Information. Subject to change.

Copyright © Infineon Technologies AG 2024. All rights reserved.

OptiMOS™ 5 80V - Dual Gate automotive MOSFET in TOLL package

Product	max $R_{DS(on)}$ [mΩ]	I_D (DC current) [A]	I_D (chip limitation) [A]	R_{thJC} [K/W]	Q_G typ. [nC]	$V_{GS(th)}$ [LL/NL]
IAUTN08S5N012L	9.00 or 1.15	300	410	0.4	19 or 178	NL + NL

- **System cost savings** – 1 Dual Gate can replace 2 MOSFETs: Switching (typ. Trench) and Linear (typ. Planar) FETs
- **The best of 2 MOSFET types in 1 package:**
  - ONFET: Low $R_{DS(on)}$ for steady state operation → low losses
  - LINFET: Linear mode operation for slow-switching, current limiting → improved EMC, wide SOA
  - Separate gate pins → independent control of LINFET and ONFET
- **SOA (Safe Operating Area) of LINFET significantly larger** compared to standard MOSFETs
- Low Transconductance and very tight $V_{GS(th)}$ range → **excellent characteristics for parallel operation**
- Proven low $R_{DS(on)}$ OptiMOS™ 5 technology and TOLL package → **high quality and robustness for automotive**
- Perfect fit for
  - **Capacitor Charging, OV (Over-Voltage) Clamping** – e.g. Disconnect Switch
  - **EMC improvement** – e.g. e-Catalyst and PTC heaters

Application examples:

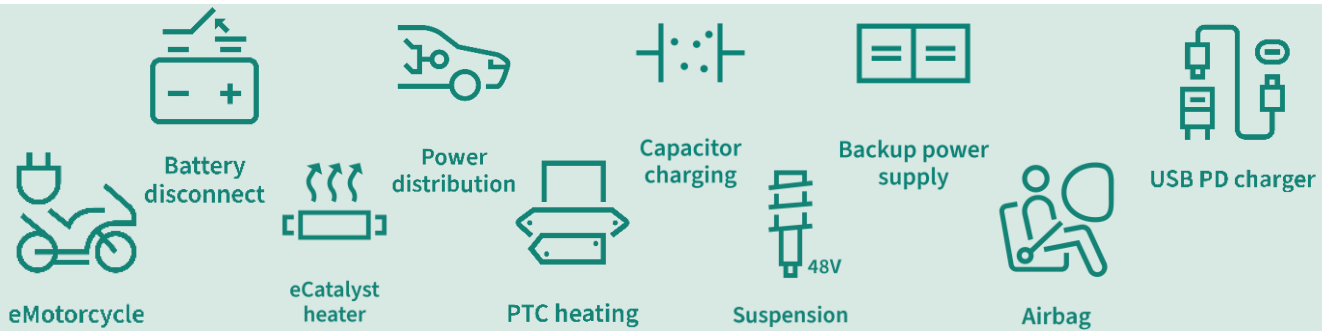

NEW
Eval. Board available



Click here for further information

TOLL Dual Gate (HSOF-8-2)

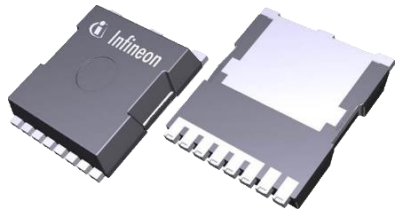

L x W x H
11.7 x 9.9 x 2.3 mm³

Al-bond wire

NEW!

In production

Copyright © Infineon Technologies AG 2024. All rights reserved.

SOA Comparison
Standard OptiMOS™ 5 vs. Dual Gate OptiMOS™ 5

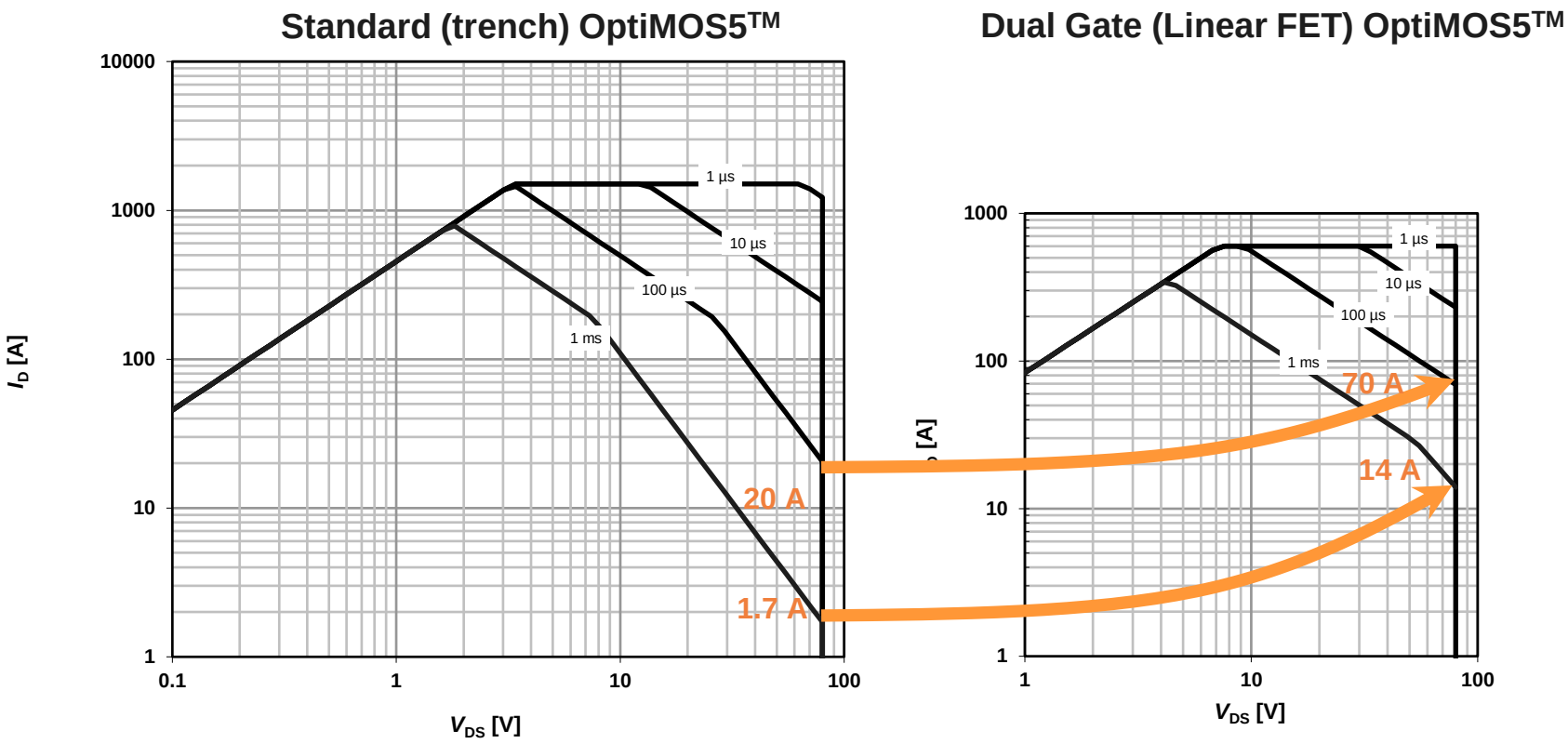

Dual Gate (Linear FET) SOA significantly larger at high V_{DS}

Enabling new applications as e.g. in-rush current limitation, short circuit clamping and slow switching

Copyright © Infineon Technologies AG 2024. All rights reserved.

Transfer Characteristics Comparison
Standard OptiMOS™ 5 vs. Dual Gate OptiMOS™ 5

Standard OptiMOS™ 5

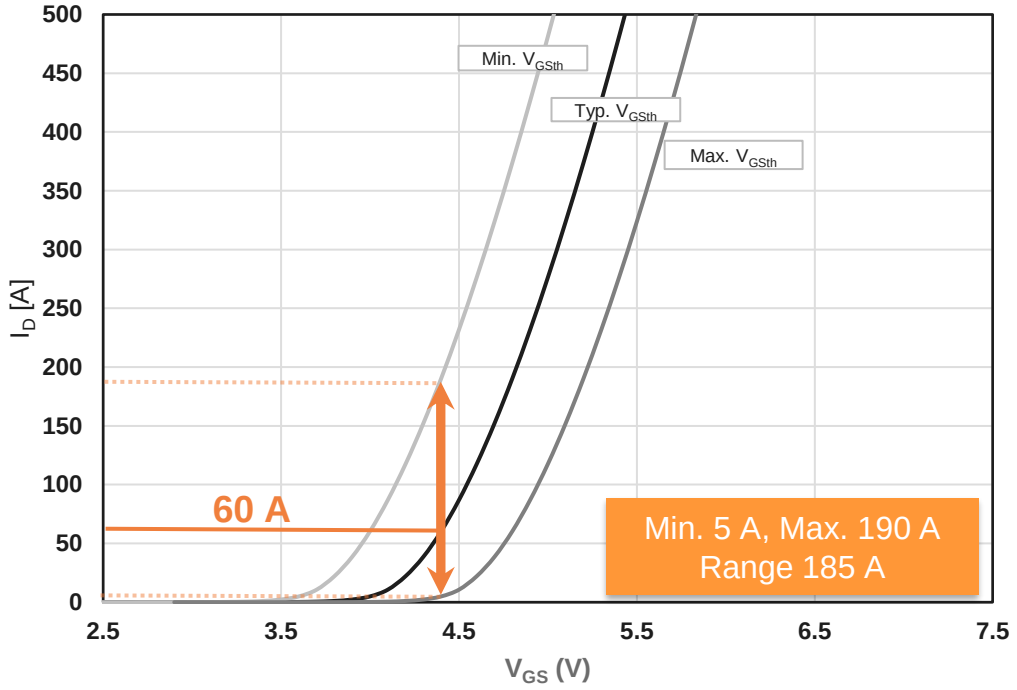

Dual Gate (Linear FET) OptiMOS™ 5

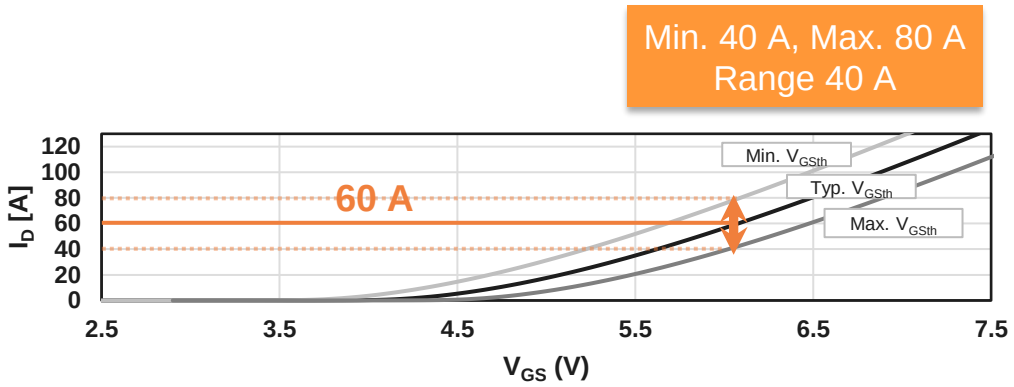

Dual Gate (Linear FET) improved current accuracy due to low transconductance and process variation

Enabling paralleling in linear mode operation

Copyright © Infineon Technologies AG 2024. All rights reserved.

Dual Gate MOSFET 80 V
Application examples

Capacitor charging

- LINFET current limited via V_{GS} adjustment according to transfer-characteristics.
- Pulsed capacitor charging to limit self-heating.
- Flexible control of PWM and switching speed.
- ONFET can be turned on to minimize steady state losses after capacitor is fully charged.

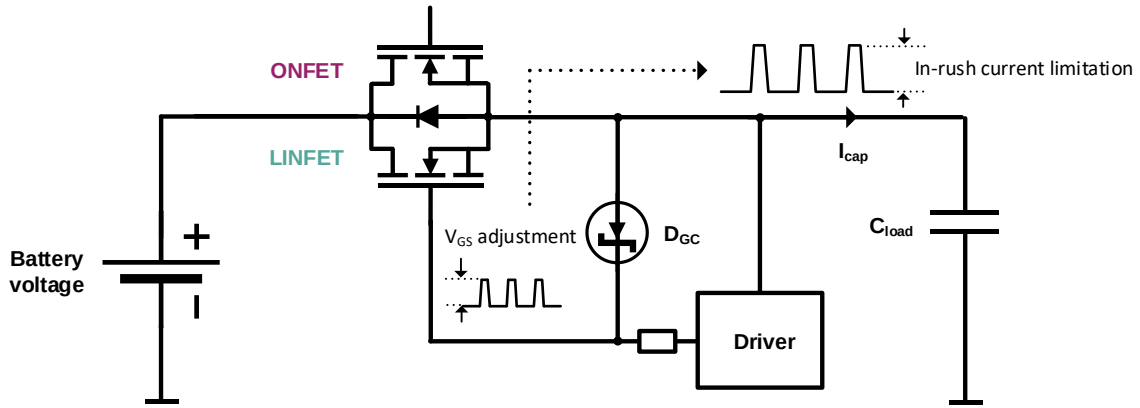

Short circuit clamping

- D_C limits the V_{DS} voltage to avoid avalanche (no hot carrier injection). Instead the MOSFET operates in linear mode to dissipate inductor energy.
- LINFET allows higher currents in linear mode and gives more flexibility for clamping circuit design.
- ONFET can be turned on to minimize steady state losses during normal operation.

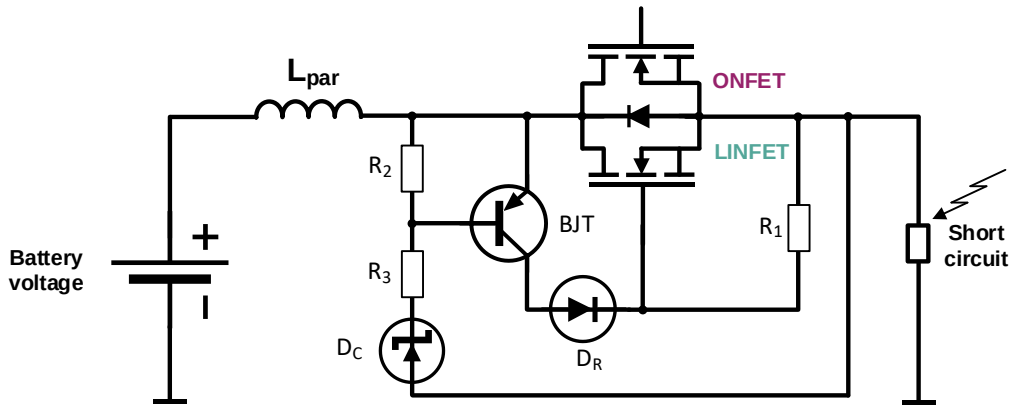

Copyright © Infineon Technologies AG 2024. All rights reserved.

Dual Gate MOSFET 80 V
Capacitor pre-charging with power resistor vs. Dual Gate MOSFET

Reduction of system cost (no pre-charge circuit needed) and acceleration of capacitor charging

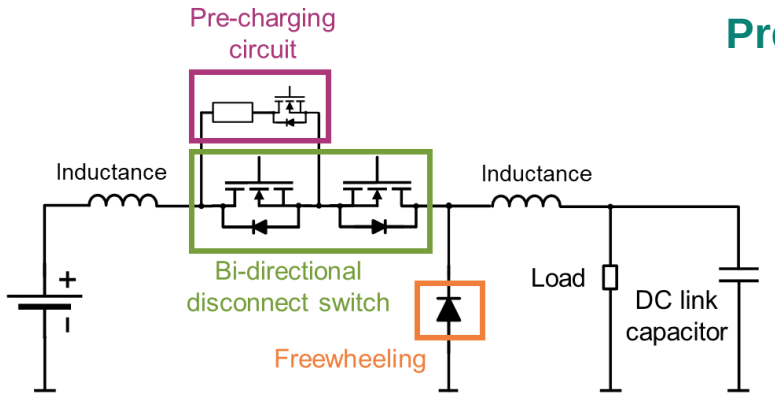

Pre-charging with power resistor

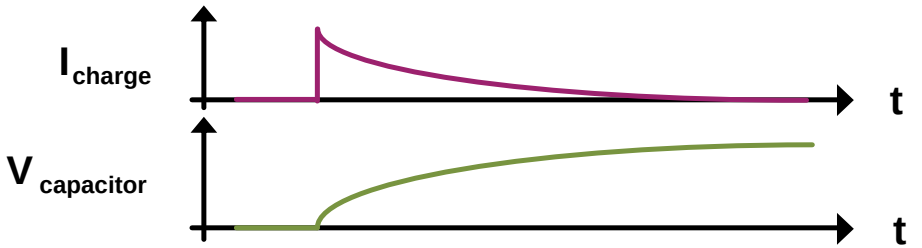

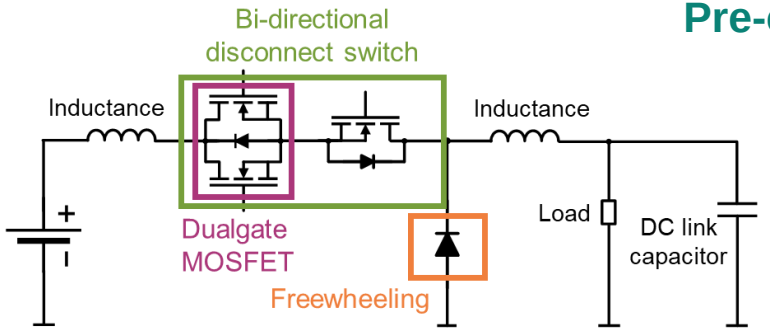

Pre-charging with Dual Gate MOSFET

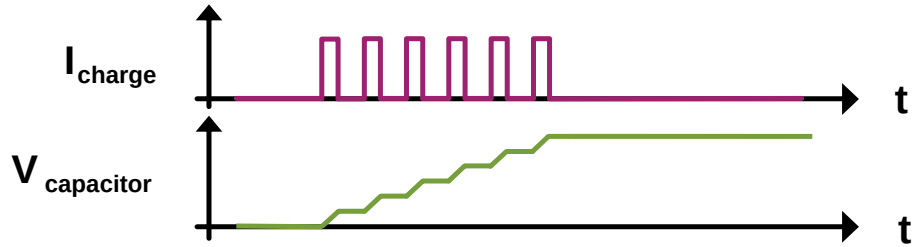

Copyright © Infineon Technologies AG 2024. All rights reserved.

Evaluation Board available!
Dual Gate 48 V switch board (uni-directional)

Dual Gate 48 V switch board (uni-directional)

- **Perfect fit for 48 V disconnect switch applications**
  - Power distribution
  - Battery management
  - Electrically heated catalyst
- **Infineon components used**
  - Dual Gate MOSFETs IAUTN08S5N012L: 80 V, max. $R_{DS(on)}$ 1.15 mΩ
  - Freewheeling MOSFET: IAUT300N08S5N012
  - 48 V high-side driver: 2ED4820-EM
- **System advantages**
  - Supports fast pulsed capacitor charging with Dual Gate MOSFET to minimize system costs (no separate pre-charging path needed).
  - Active clamping capable to dissipate inductive energy from cable harness. Dual Gate MOSFET operates in linear mode instead of avalanche to increase short circuit robustness and increase drain-source voltage clamp accuracy.

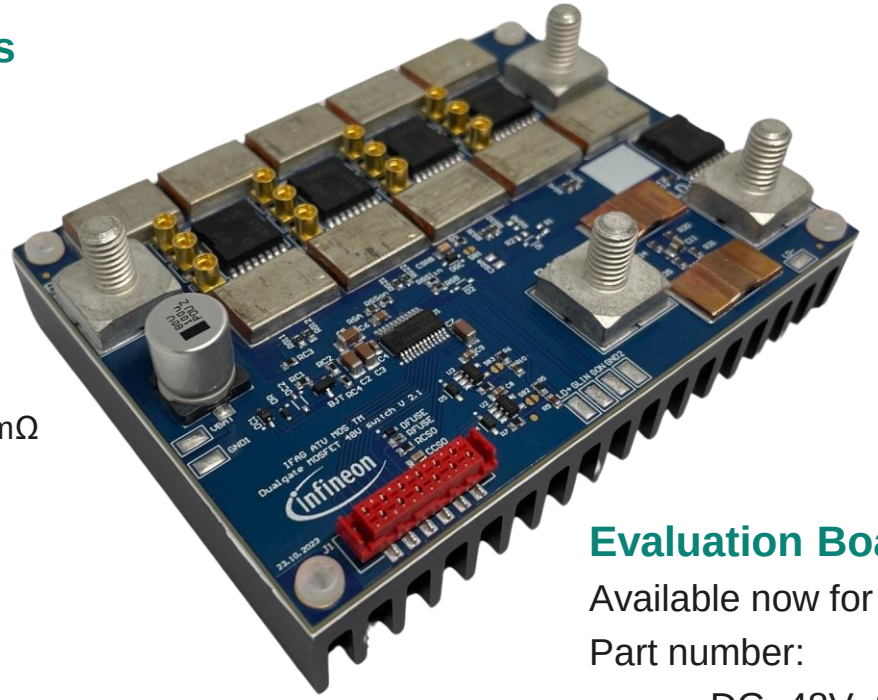

Evaluation Board

Available now for purchase

Part number:

DG_48V_SWITCH_KIT or
DG48VSWITCHKITTOBO1

Contact your Infineon salesperson for support

Check out infineon.com for more information
https://www.infineon.com/cms/en/product/evaluation-boards/dg_48v_switch_kit/

Copyright © Infineon Technologies AG 2024. All rights reserved.


Infineon