

OPTIREG™ PMIC TLF30682QV

The one companion for safe & reliable supply of AURIX™ microcontrollers in ADAS applications product presentation

PMIC

OPTIREG™

Find it online !

Infineon Automotive Division

Q4 2024

public

Table of contents

1 OPTIREG™ families: Power for microcontrollers 3

2 OPTIREG™ PMIC TLF30682QV at a glance 22

3 OPTIREG™ PMIC TLF30682QV details 27

4 OPTIREG™ PMIC TLF30682QV benefits 41

5 OPTIREG™ PMIC TLF30682QV applications: 77GHz-Radar, camera 44

6 Support 53

Copyright © Infineon Technologies AG 2024. All rights reserved.

Table of contents

1 **OPTIREG™ families: Power for microcontrollers** **3**

2 OPTIREG™ PMIC TLF30682QV at a glance 22

3 OPTIREG™ PMIC TLF30682QV details 27

4 OPTIREG™ PMIC TLF30682QV benefits 41

5 OPTIREG™ PMIC TLF30682QV applications: 77GHz-Radar, camera 44

6 Support 53

Copyright © Infineon Technologies AG 2024. All rights reserved.

OPTIREG™ PMIC families: Power for Microcontrollers

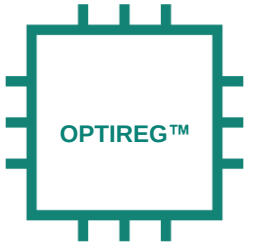

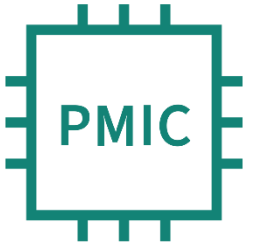

OPTIREG™

Power Supply is a key function in every automotive ECU

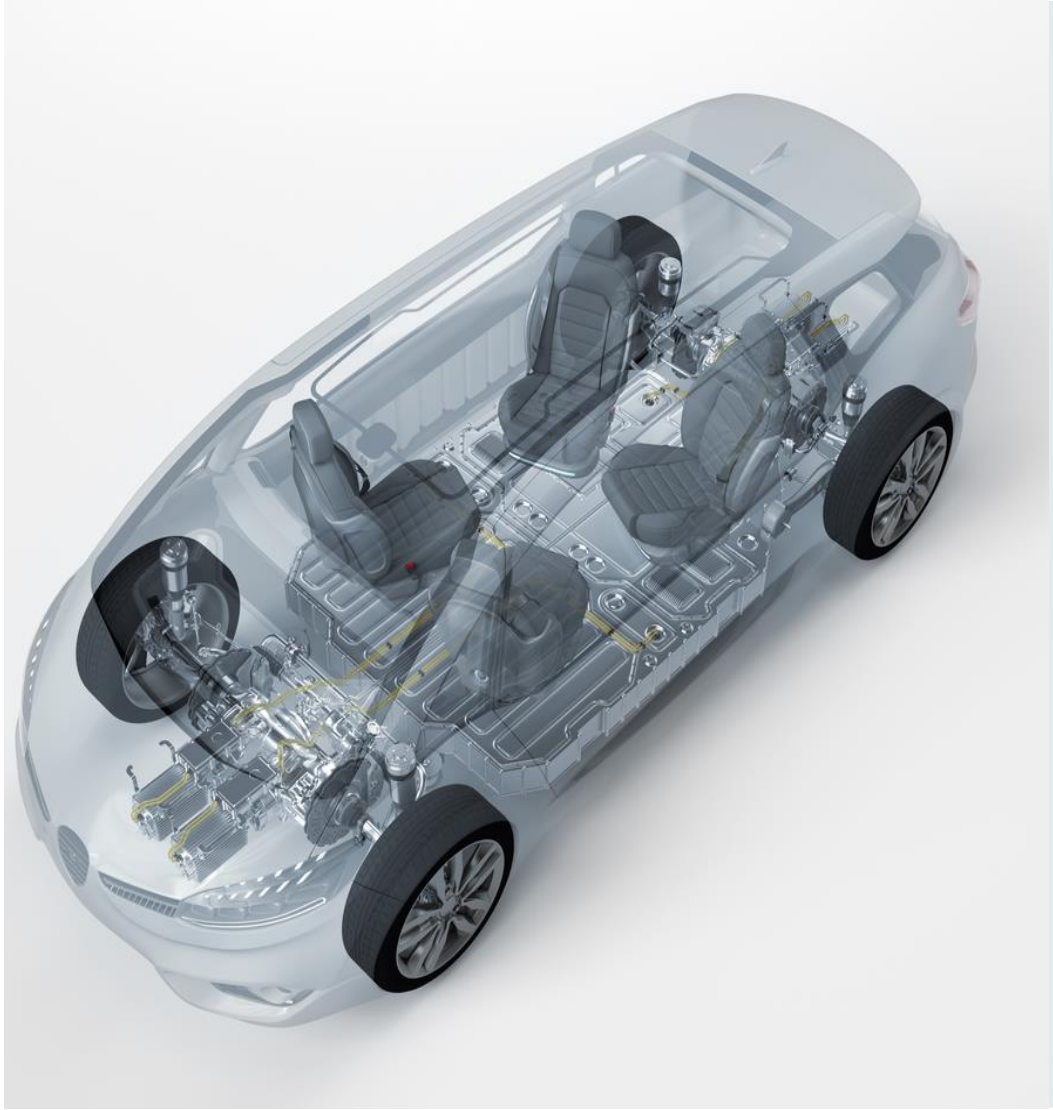

PMIC
OPTIREG™
CAN/LIN
DCDC/LDO
SBC
DC
DC
Linear post regulators
DC-DC

Generic ECU in a car

Power supply OPTIREG™
µC
Actuators
Traction inverter
Radar
Transmission
Networking
Sensors
CAN
LIN
Ethernet
SerDes

Copyright © Infineon Technologies AG 2024. All rights reserved.

Infineon offers both discrete and integrated power supply products for automotive applications

Linear post regulators | OPTIREG™ Switcher | SBC | OPTIREG™

OPTIREG™

OPTIREG™ Linear

These linear power supply solutions are suited for body, infotainment, chassis, safety, powertrain and transmission applications

- High Performance
- General Purpose
- Voltage Trackers
- Application Specific
- Application Specific (24 V)
- Post Regulators

OPTIREG™ Switcher

These switched mode power supply solutions are ideal for body, infotainment, chassis and safety applications.

- Buck Converter
- Boost Converter
- Buck Controller

OPTIREG™ PMIC

These integrated power supply solutions are ideal for functional safety relevant applications like chassis, powertrain, domain control and transmission.

- Safe Computing
- Safe Control

OPTIREG™ System Basis Chips

These high integration solutions offer power supply, communication, diagnosis and supporting feature in a single device

- Lite SBC
- Mid-Range+ SBC
- DCDC+ SBC
- Multi-CAN Power+ SBC

In Vehicle Network ICs

These modular, flexible communication solutions offer scalable feature sets and different packages

- Classical LIN
- LIN LDO
- Dual LIN
- Classical CAN
- CAN Partial Networking
- CAN FD
- CAN FD SIC

Copyright © Infineon Technologies AG 2024. All rights reserved.

The OPTIREG™ PMIC: An integrated power supply including system safety functions



Copyright © Infineon Technologies AG 2024. All rights reserved.

OPTIREG™ PMIC: Strong commitment to General Purpose and Application Specific PMIC solutions

PMIC OPTIREG™

Infineon

POWERTRAIN

ICE – PMICs

TLE9243QK

- System Safety Functions
- System Power Supply Functions
- ICE Base Functions

e.g. xEV – PMICs

TLE9744QK

- System Safety Functions
- System Power Supply Functions
- xEV Base Functions

AEC Qualified

PROSIL ISO 26262 compliant

RoHS

PMIC OPTIREG™

General Purpose PMICs

- System Safety Functions
- System Power Supply Functions

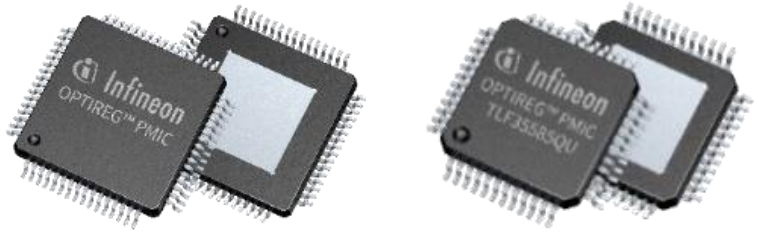

SAFETY

ADAS – PMICs

TLF30682QV

- System Safety Functions
- System Power Supply Functions
- ADAS Base Functions

e.G. Chassis – PMICs

- System Safety Functions
- System Power Supply Functions
- Chassis Base Functions

MOTOR DRIVES

Transmission
Double clutch transmission
Transfer case
Traction inverter
DC-DC HV/12V
On-board charger
BMS
48V
Integrated starter generator

Radar
Lidar
Camera
Sensor fusion
Brake booster
Electric power steering
48V
Suspension
Electric parking brake

Copyright © Infineon Technologies AG 2024. All rights reserved.

General Purpose (GP) vs. Application Specific (AS) -PMICs

OEMs/Tier1s have different strategies for PMICs

Cross Application Approach

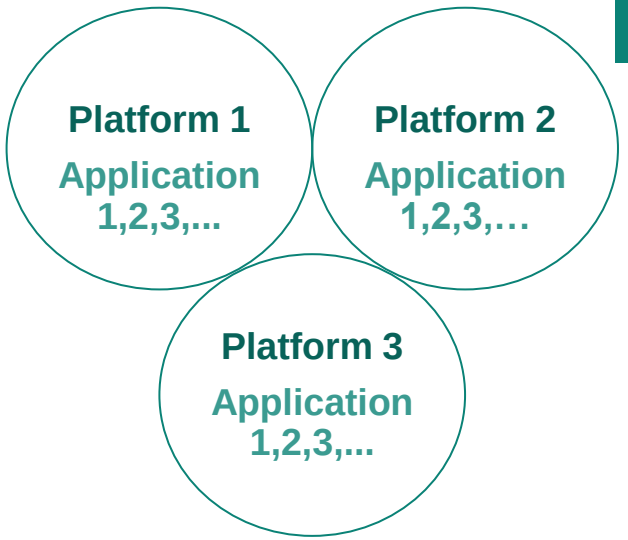

› **GP-PMICs,** for various applications

- ✓ **Software re-use, flexibility** for AS functions
- ✗ **Not fully system cost optimized solutions** (BOM and System FuSa)

Cross Platform Approach

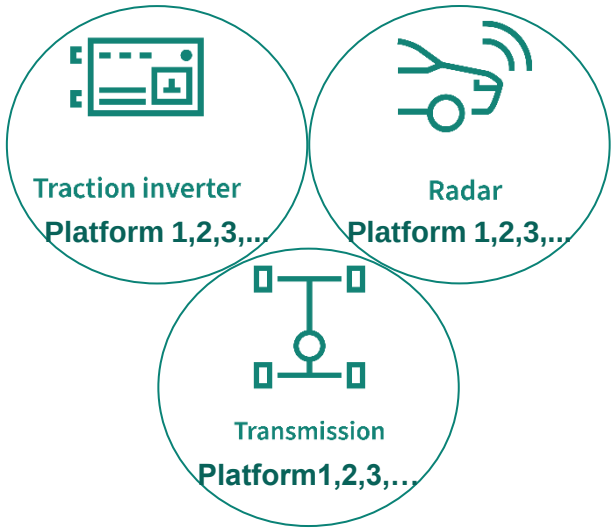

› **AS-PMICs,** for **ONE** specific application

- ✓ **Significant system cost down** (discrete circuitry and failure modes, optimized System FuSa)
- ✗ **AS dedicated hardware and software development**

Copyright © Infineon Technologies AG 2024. All rights reserved.

OPTIREG™ PMIC: Strong commitment to General Purpose and Application Specific PMIC solutions

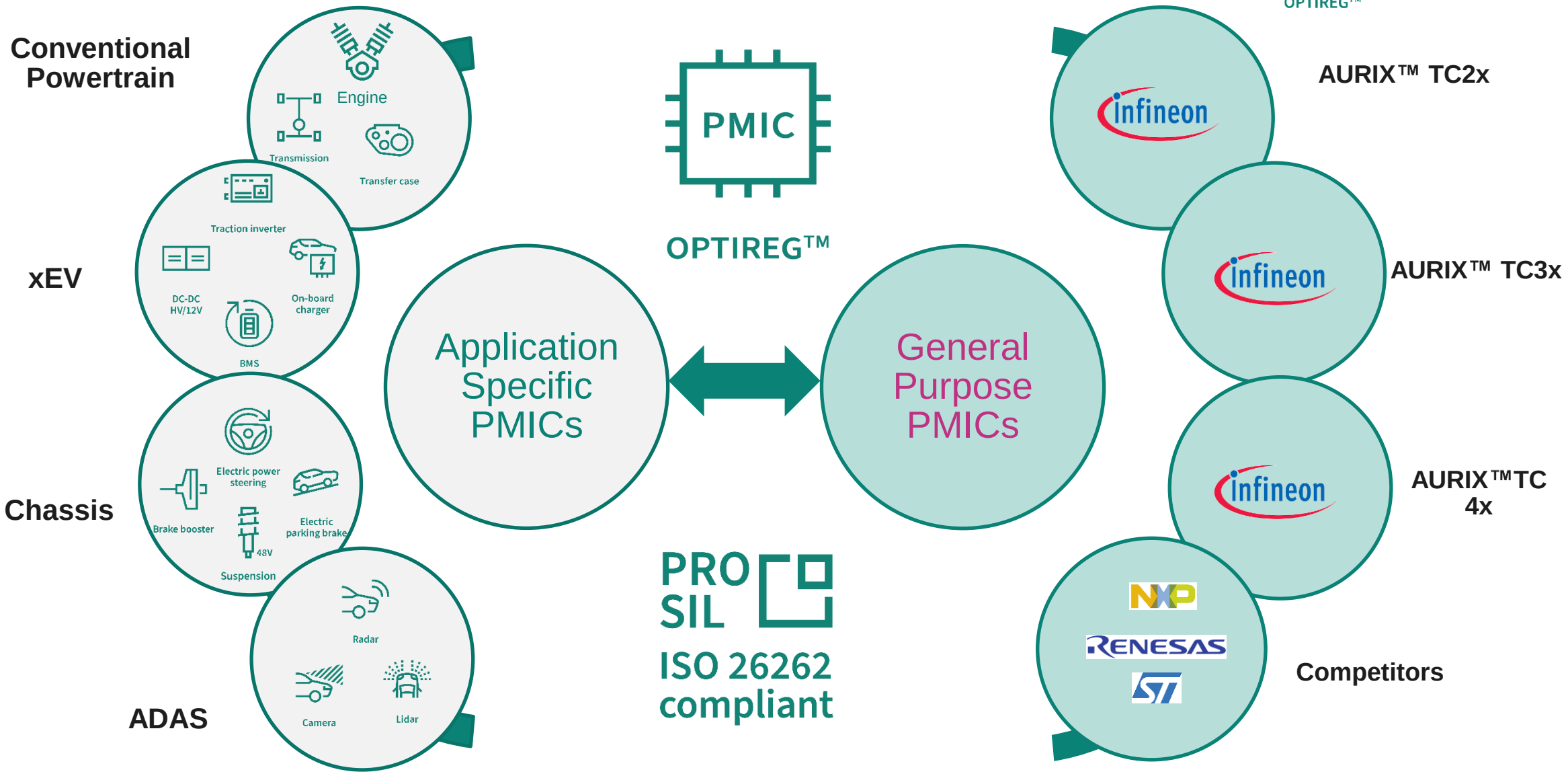

Copyright © Infineon Technologies AG 2024. All rights reserved.

AURIX™ microcontroller & OPTIREG™ PMIC teaming up for Functional Safety in the focus automotive applications

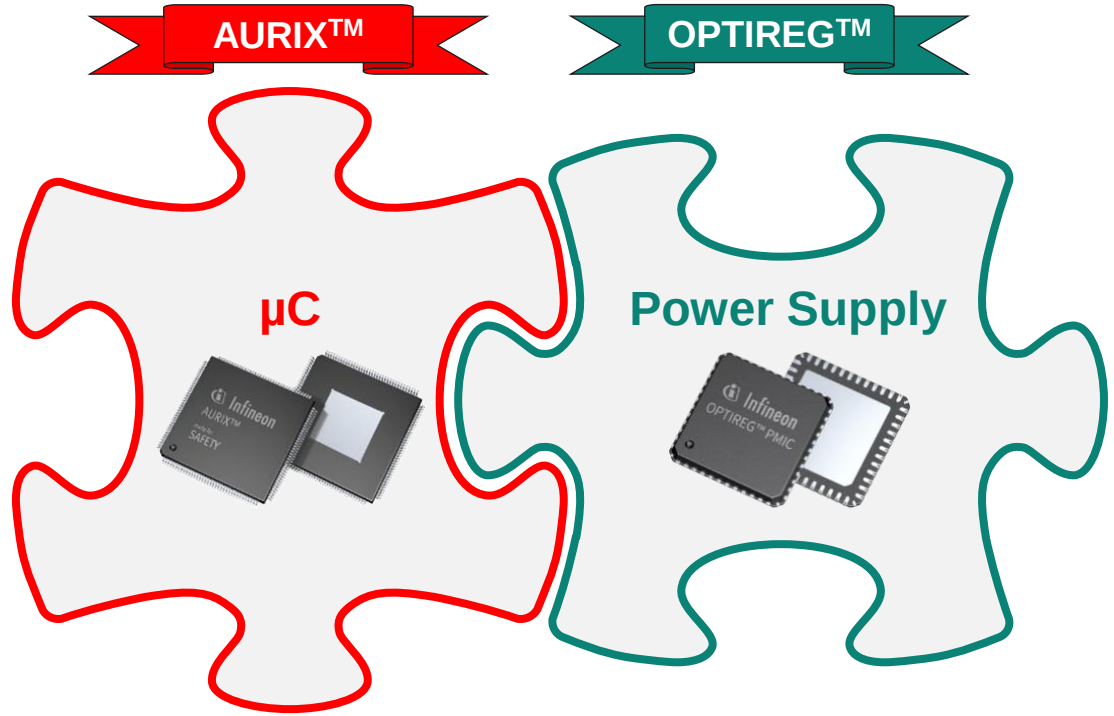

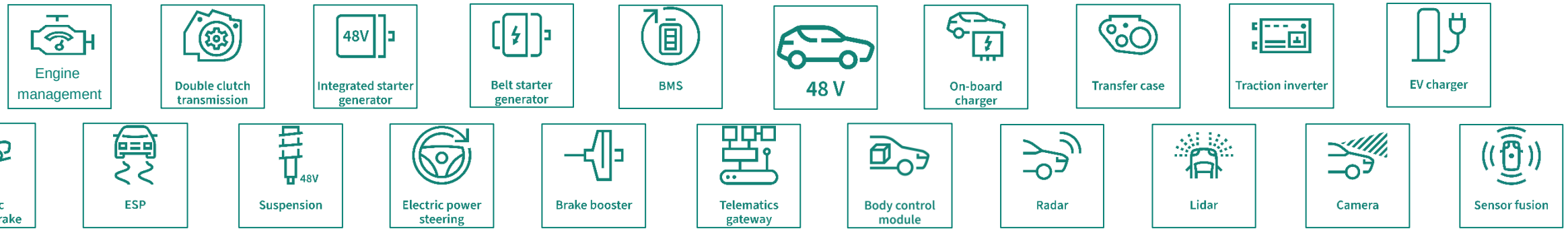

Copyright © Infineon Technologies AG 2024. All rights reserved.

Functional Safety
Relevant applications

Safe Control

Conventional Powertrain

- Engine management
- Transmission
- Transfer case
- Integrated starter generator (48V)

Electrical Drive Train

- BMS
- Traction inverter
- On-board charger

Chassis

- Electric power steering
- ABS
- Suspension (48V)

Safe Compute

Body

- Car lighting
- Telematics gateway

Safety / ADAS

- Airbag
- Radar
- Lidar
- Camera
- Sensor fusion



Copyright © Infineon Technologies AG 2024. All rights reserved.

OPTIREG™ PMICs supports ASIL-D applications, enabling extended lifetime in harsh automotive environments

Application examples

EDT/ xEV

Chassis & safety

Powertrain

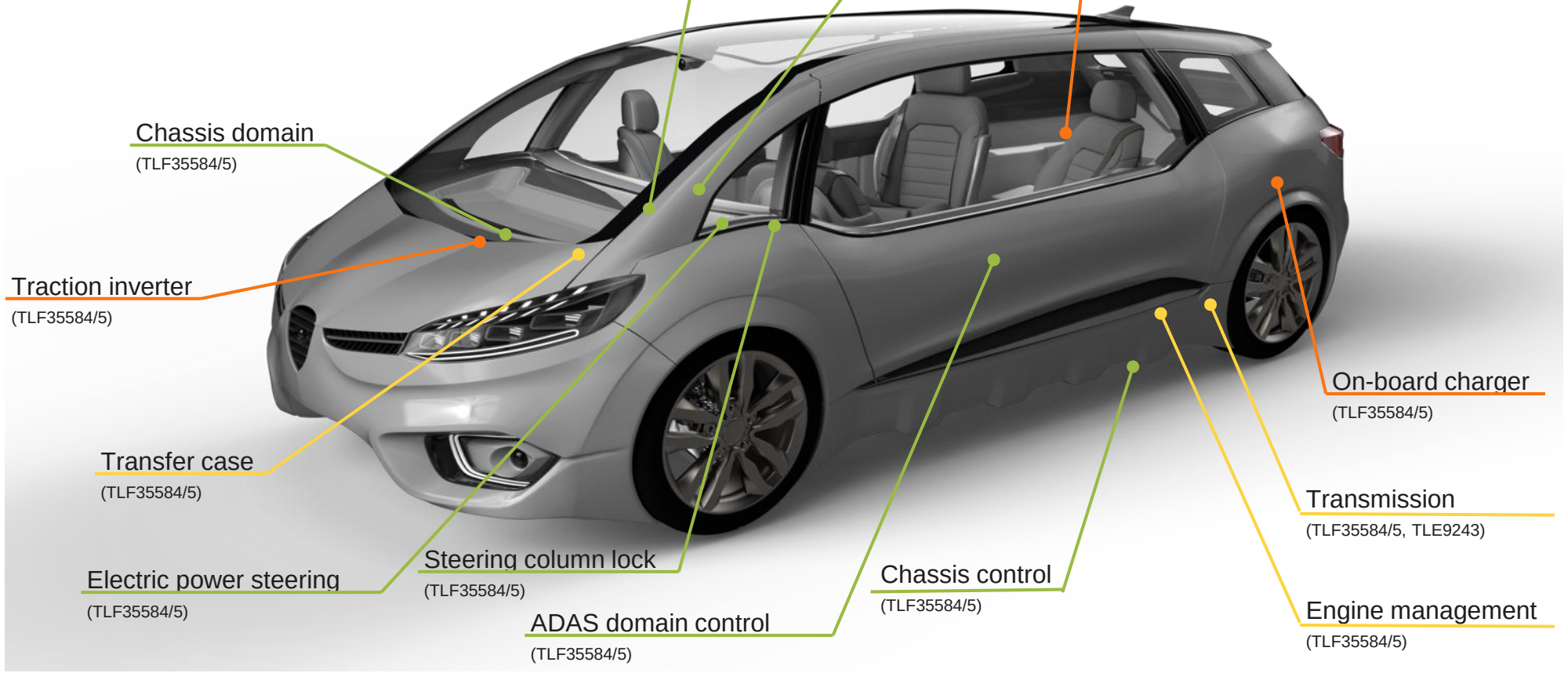

Copyright © Infineon Technologies AG 2024. All rights reserved.

OPTIREG™ PMIC Decision Tree

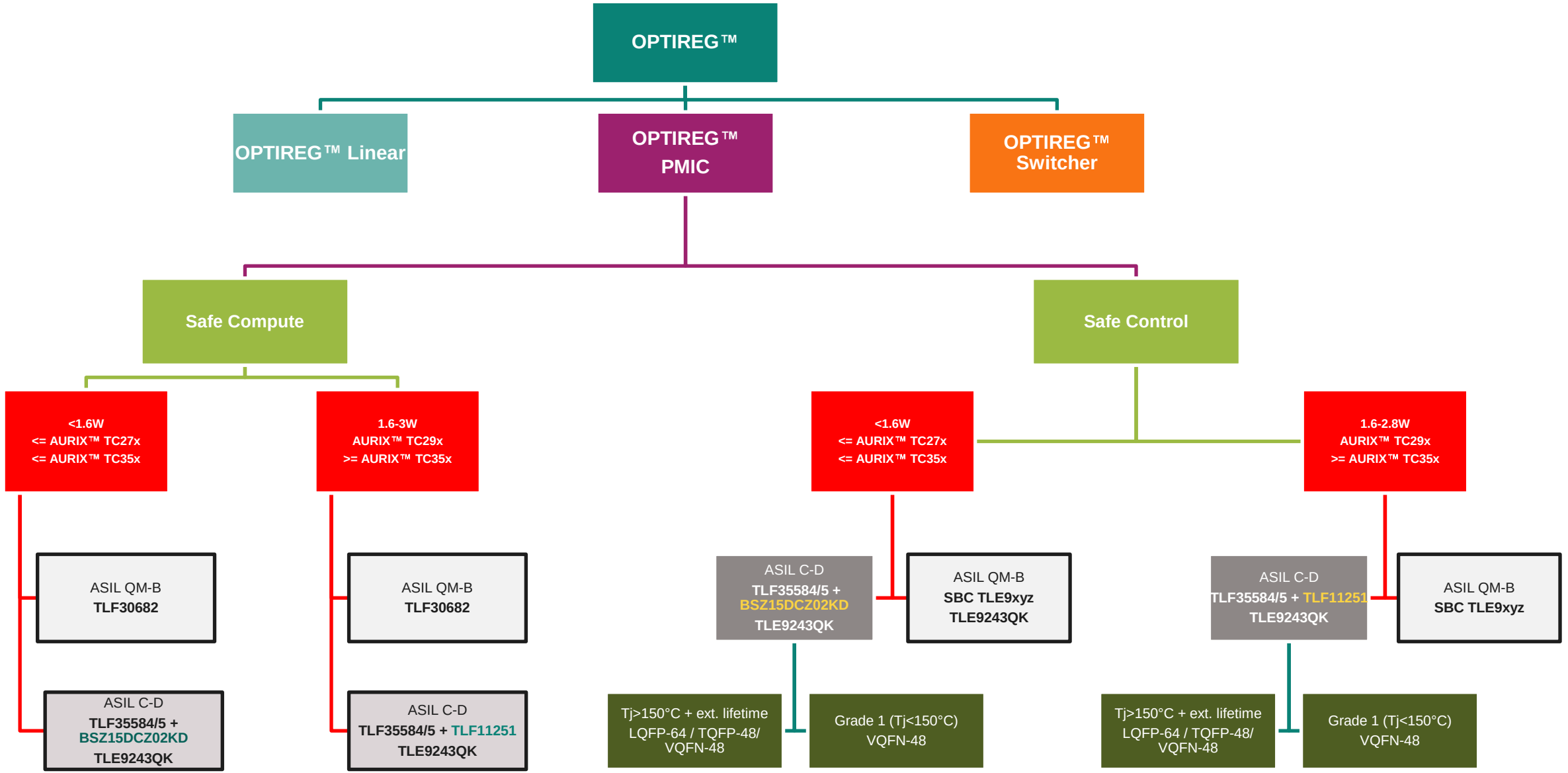

Copyright © Infineon Technologies AG 2024. All rights reserved.

Quality



Zero defect mentality and benchmark production quality

Infineon Zero Defect Mentality
We Do what we promise



We reduced our ppm rate significantly to sub ppm levels



We are able to deliver Zero Defect for all but 3.4 seconds last year



87% of our products are already Zero Defect



Regional network of failure analysis labs and strong localized competencies



Zero delamination approach



Average FAR TAT 17 days (60% <14 days)

Copyright © Infineon Technologies AG 2024. All rights reserved.

Premium Quality
Zero Defect – our invest

Qualifying according AEC alone does not enable Zero Defect over 15+ years of product life time

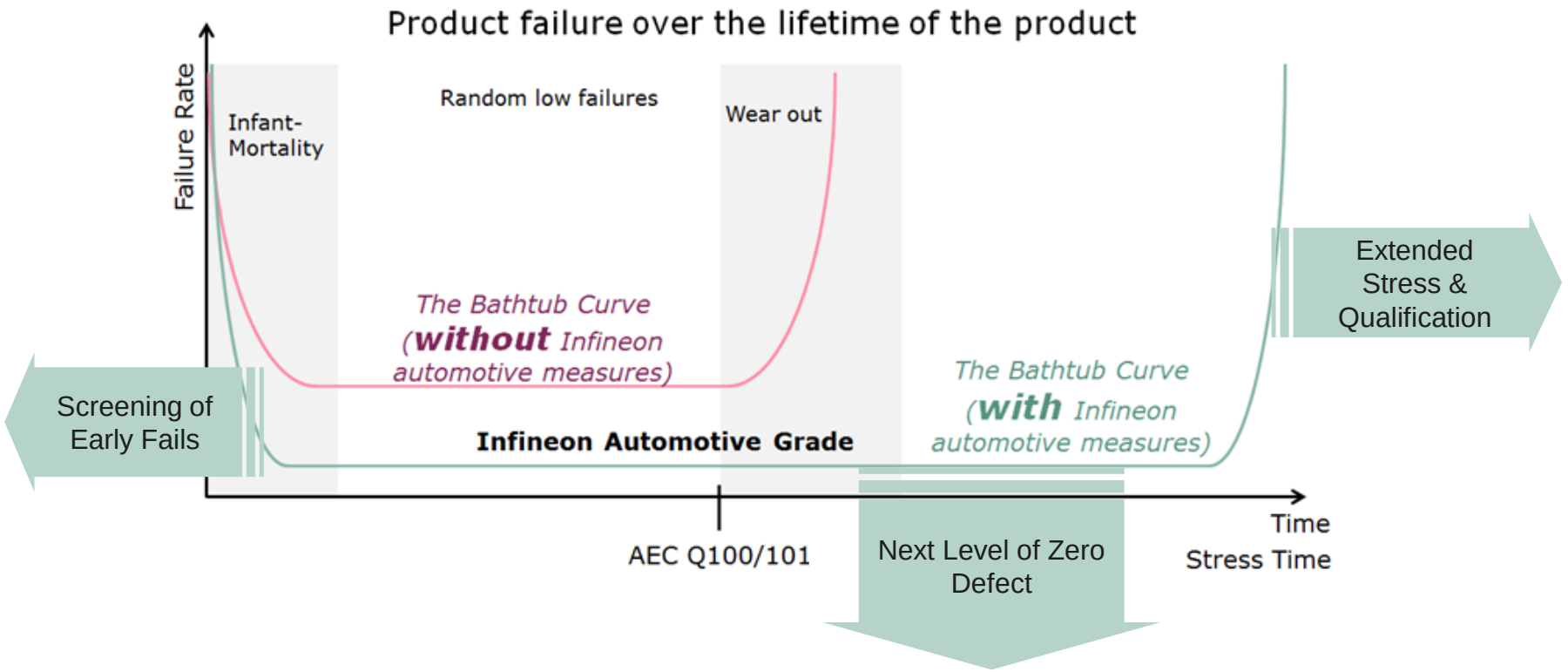

Infineon takes additional measures in automotive product design, stress and qualification to push for Zero Defect

Copyright © Infineon Technologies AG 2024. All rights reserved.

Table of contents

1 OPTIREG™ families: Power for microcontrollers 3

2 **OPTIREG™ PMIC TLF30682QV at a glance** **22**

3 OPTIREG™ PMIC TLF30682QV details 27

4 OPTIREG™ PMIC TLF30682QV benefits 41

5 OPTIREG™ PMIC TLF30682QV applications: 77GHz-Radar, camera 44

6 Support 53

Copyright © Infineon Technologies AG 2024. All rights reserved.

OPTIREG™ PMIC TLF30682QV
At a Glance

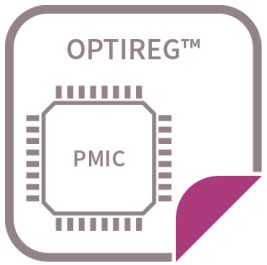

OPTIREG™ TLF30682QV PMIC: System power supply and safety functions integrated into a single package

Radar

PMIC

OPTIREG™



Copyright © Infineon Technologies AG 2024. All rights reserved.

OPTIREG™ PMIC TLF30682QV: System power supply and safety functions integrated into a single package for ADAS

Block Diagram

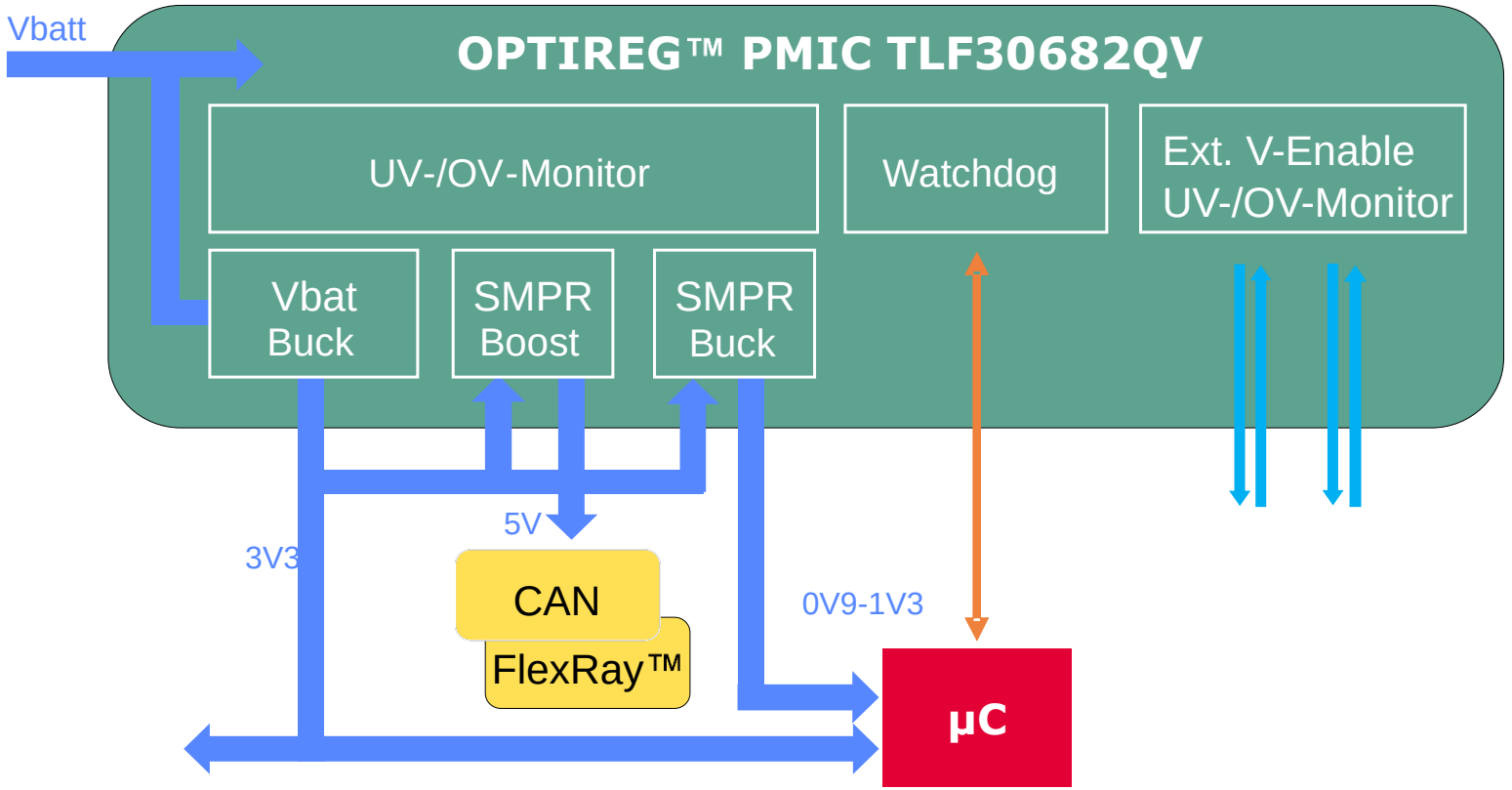

Copyright © Infineon Technologies AG 2024. All rights reserved.

Application Specific OPTIREG™ ADAS-PMIC TLF30682QV for ADAS

Radar PMIC OPTIREG™

Key Features

Grade 1

- High-Efficiency Main Buck Converter
  - IQ = 3.5A; VQ = 3V3 (others on request, e.g. 3V9)
  - fsw: 1.8MHz-2.5MHz
- Flexible Buck-Post-Regulator
  - IQ = 2.0A; VQ = 0V9 .. 1V3 (1V5, 1V8, 2V5 on request) via SPI
- Boost-Post-Regulator for Transceiver
  - IQ = 0.25A; VQ = 5V0
- Optional Spread Spectrum for all SMPS
- Sync_In & Sync_Out
- ENABLE (T15 and CAN/FlexRay™)
- SPI
  - 16-bit, up to 10MHz
- Additional Features
  - Multiple independent bandgaps
  - UV/OV-Monitoring of integrated rails
  - UV/OV-Monitoring of 2 external rails
  - Window-WD
- Vin: 4V .. 35V (40V with limitations)

Block Diagram

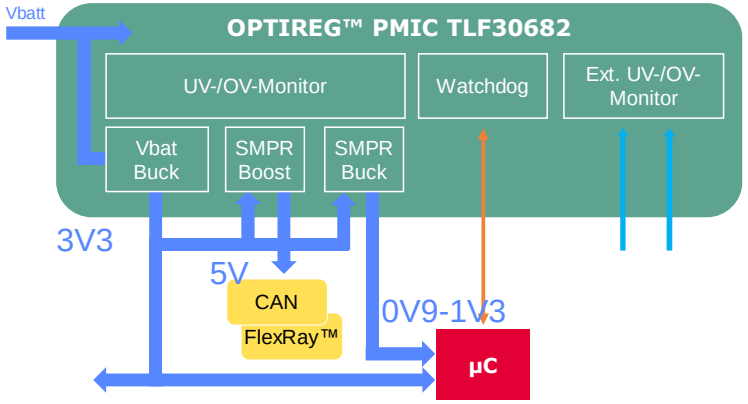

Package



PG-VQFN-48

RoHS

AEC Qualified

Applications

QM/ up to ASIL-B

- 77/79GHz Radar
- Camera (Multi-Purpose)
- Cluster / Center Stack
- Display

Radar Camera Car display HMI

Copyright © Infineon Technologies AG 2024. All rights reserved.

Table of contents

1 OPTIREG™ families: Power for microcontrollers 3

2 OPTIREG™ PMIC TLF30682QV at a glance 22

3 **OPTIREG™ PMIC TLF30682QV details** **27**

4 OPTIREG™ PMIC TLF30682QV benefits 41

5 OPTIREG™ PMIC TLF30682QV applications: 77GHz-Radar, camera 44

6 Support 53

Copyright © Infineon Technologies AG 2024. All rights reserved.

OPTIREG™ PMIC TLF30682QV
Details

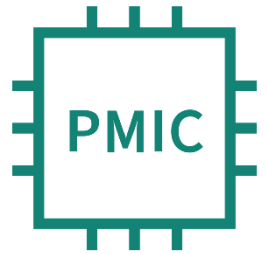

OPTIREG™

OPTIREG™ PMIC TLF30682QV
Overview

Features

- Input voltage range:
  - Vin: 4V .. 35V (40V with limitations)
  - Vin,start-up,min: 6V
- Output voltages rails:
  - 3.3V/0.9-1.3V/5.0V
  - Further variants on request
- SPI interface:
  - 16-bit, up to 10MHz
- Package: PG-VQFN-48 EP
  - 7mm x 7mm
  - Pitch: 0.5mm
  - With lead-tip-inspection
  - AEC Q100, RoHS
- Temperature range:
  - Tj: -40°C … 150°C



AEC Qualified

RoHS

Copyright © Infineon Technologies AG 2024. All rights reserved.

OPTIREG™ PMIC TLF30682QV
Overview

Features

- ENABLE
  - High-voltage pin: -0.3V .. 40V
  - Edge triggered with deglitching

- Ramp-up sequence
  - Buck1
  - Buck2, Boost
  - Ext1 (if existing)
  - Ext2 (if existing)

- Current consumption
  - OPERATIONAL <20mA
  - DISABLED <10-15µA

Copyright © Infineon Technologies AG 2024. All rights reserved.

OPTIREG™ PMIC TLF30682QV
Interface

Features

- SPI
  - Full duplex mode
  - 16bit-SPI
    - 8 bit command word
    - read or write bit
    - 6 bit address
    - parity bit
    - 8 bit data word
  - CLK operating frequency:
    - up to 10MHz
  - Dedicated I/O-supply
  - Reset out, Window Watch Dog

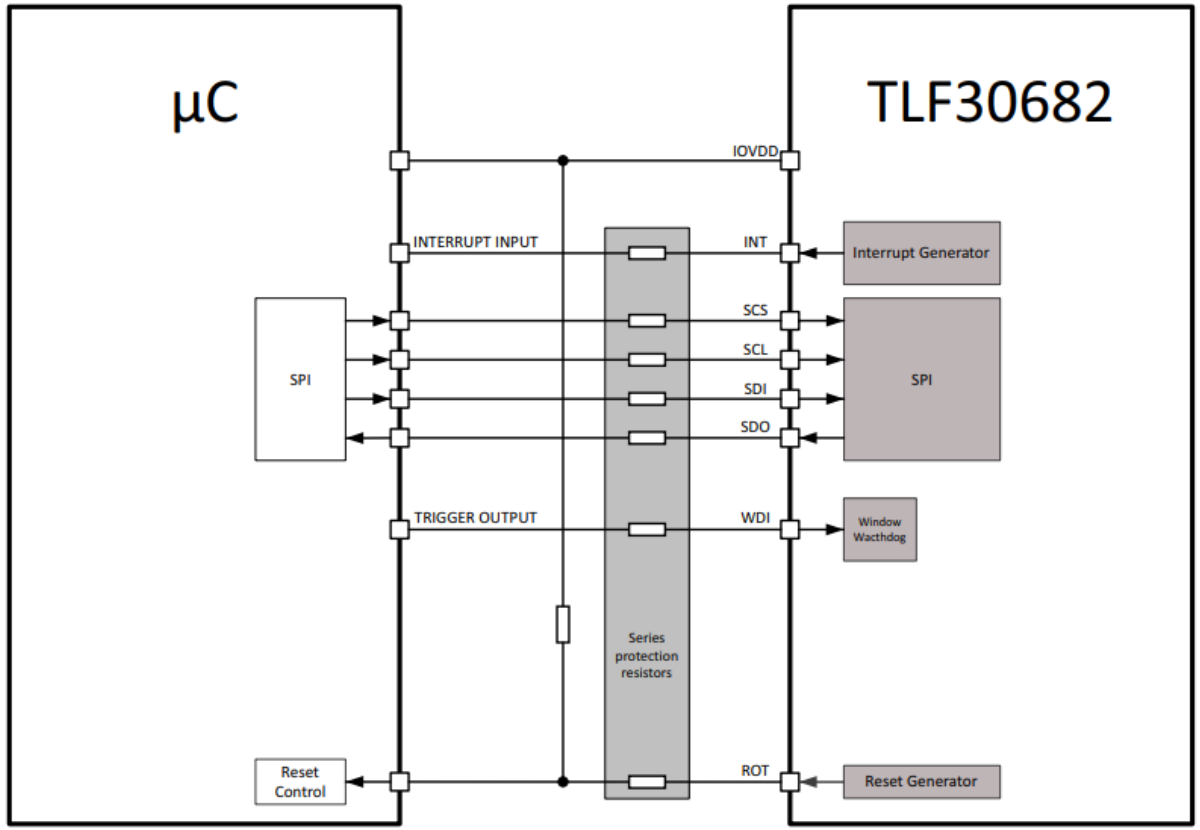

Copyright © Infineon Technologies AG 2024. All rights reserved.

OPTIREG™ PMIC TLF30682QV
Block Diagram

Detailed Block Diagram

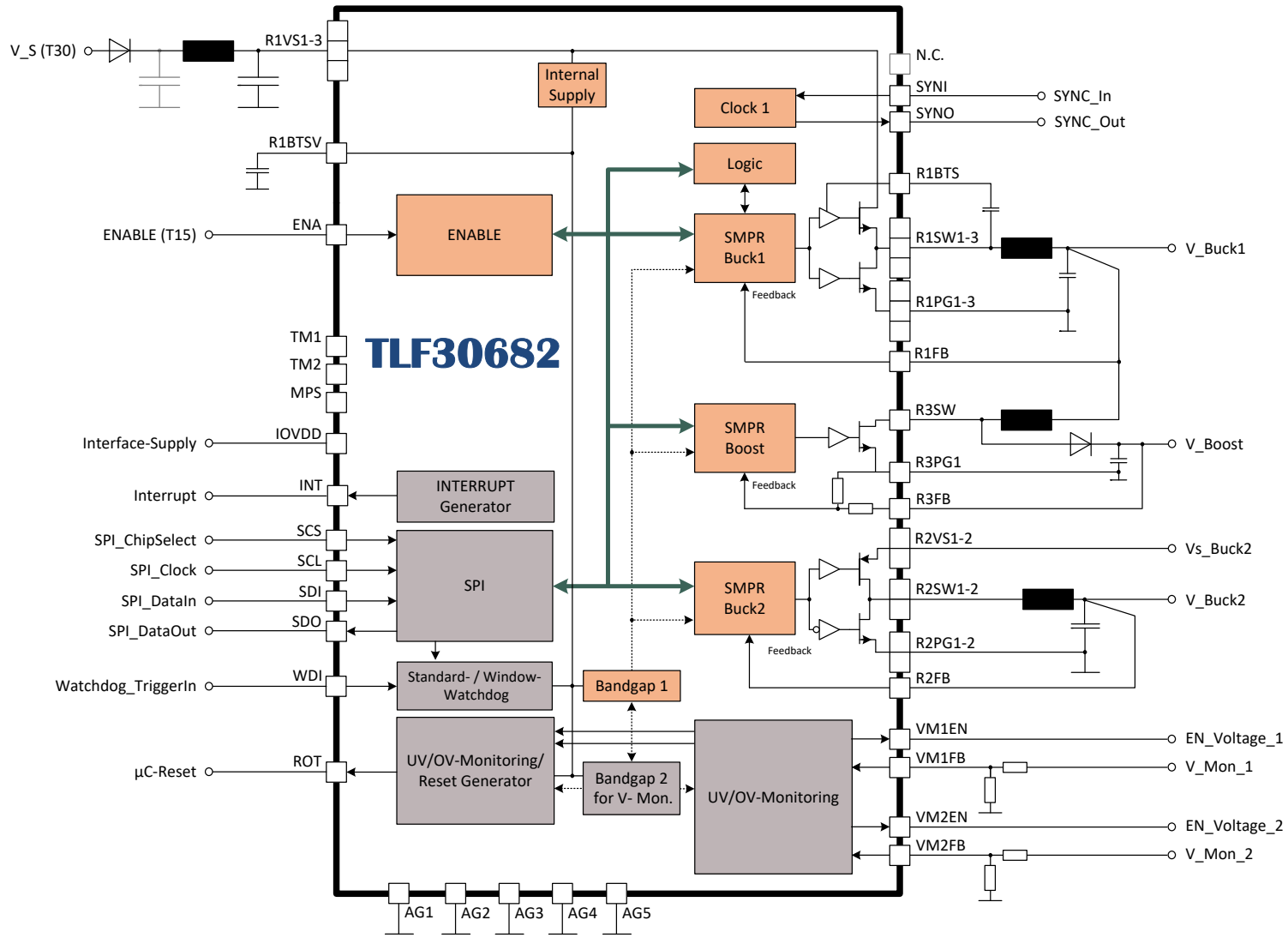

Copyright © Infineon Technologies AG 2024. All rights reserved.

OPTIREG™ PMIC TLF30682QV
Supply - 1

Detail Supply-1

- Vbatt-connected Buck (Buck1)
  - Synchronous n/n-stage integrated
  - VQ = 3V3 ±2%
    - Further variants on request
      - 5.0V
      - 5.6V
  - IQ = 3.5A
  - fsw:
    - Range: 1.8-2.5Mhz
    - Default: 2.2MHz
    - Fine-adjustment via SPI
    - Optional spread spectrum
    - Especially for radar:
      - Sync_In
      - Sync_Out

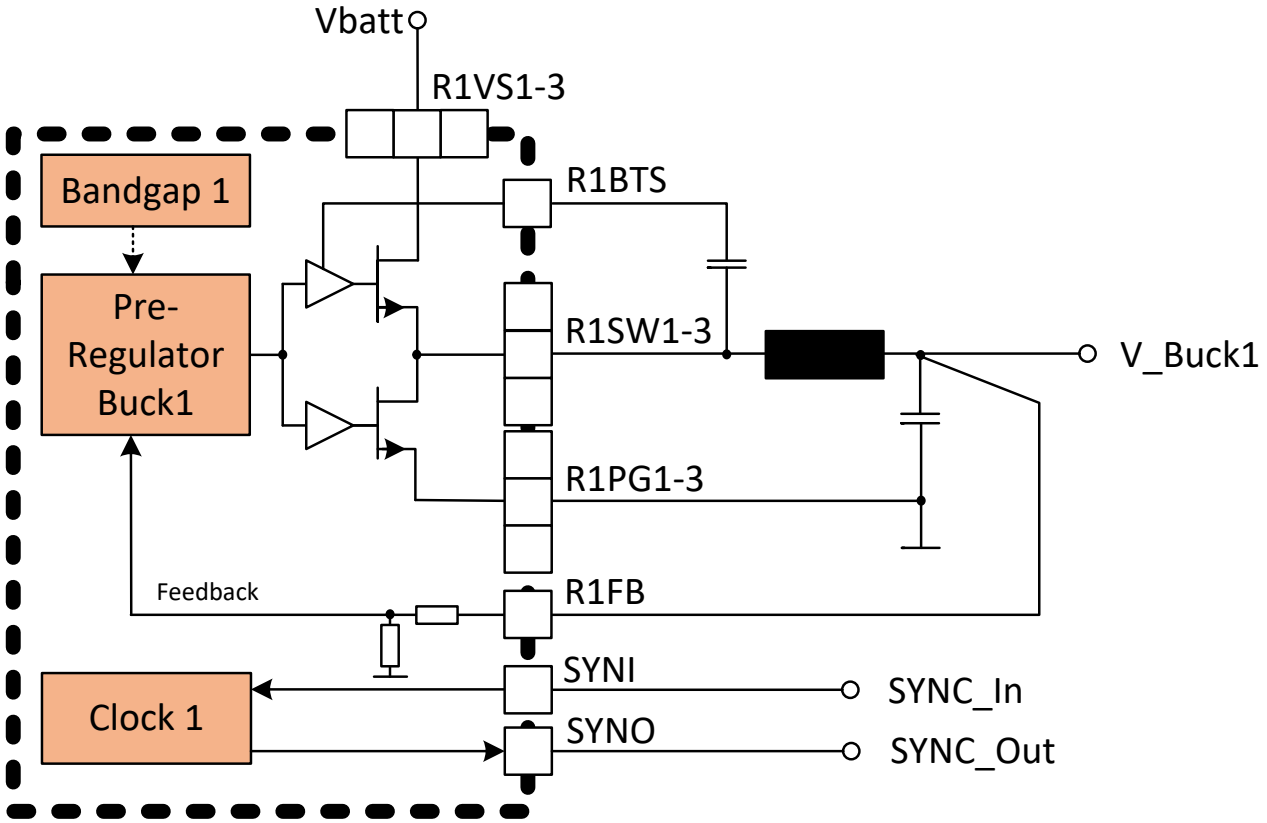

Copyright © Infineon Technologies AG 2024. All rights reserved.

OPTIREG™ PMIC TLF30682QV
Supply - 2

Detail Supply-2

› SMPR Buck (Buck2)

- Synchronous p/n stage integrated
- No bootstrap capacitor
- VQ = 0V9 … 1V3 ±2%
  - Fine adjustment of VQ via SPI (50mV-steps)
  - Further variants on request
    - 1V5
    - 1V8
    - 3V3 (Buck1 = 5V0/5V6)
- IQ = 2.0 A
- fsw:
  - Equal to Buck1-fsw
  - In phase or phase shifted to Buck1
  - Optional spread spectrum (based on buck1 setting)

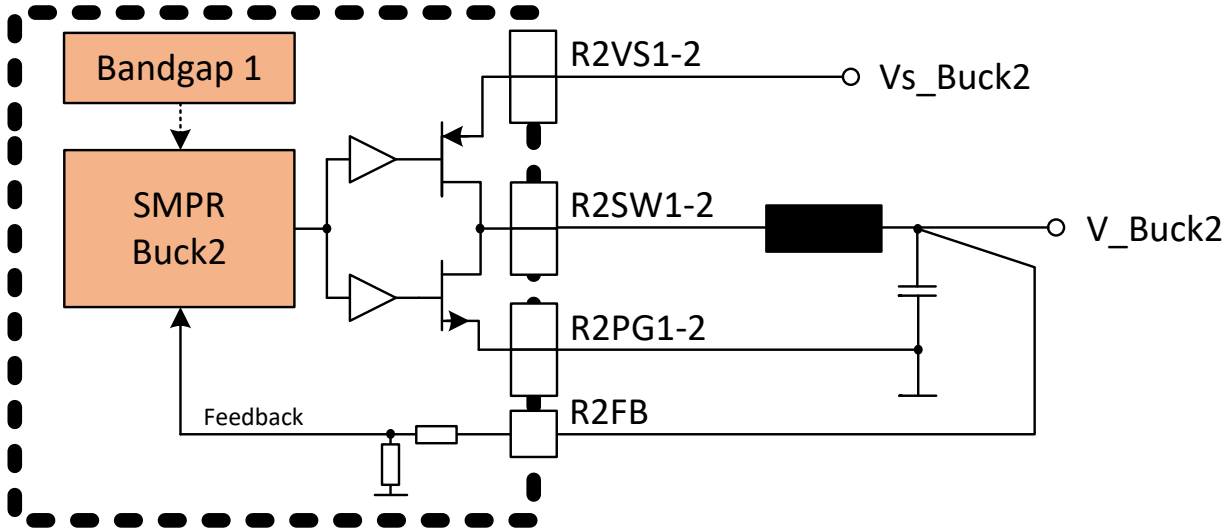

Copyright © Infineon Technologies AG 2024. All rights reserved.

OPTIREG™ PMIC TLF30682QV
Supply - 3

Detail Supply-3

- SMPR Boost - Dedicated Transceiver supply
  - Asynchronous, LS integrated
  - VQ = 5V0; ±2%
  - IQ = 250mA (sourced by 3V3)
  - fsw:
  - Equal to Buck1-fsw
  - In phase or phase shifted to Buck1
  - Optional spread spectrum (based on buck1 setting)

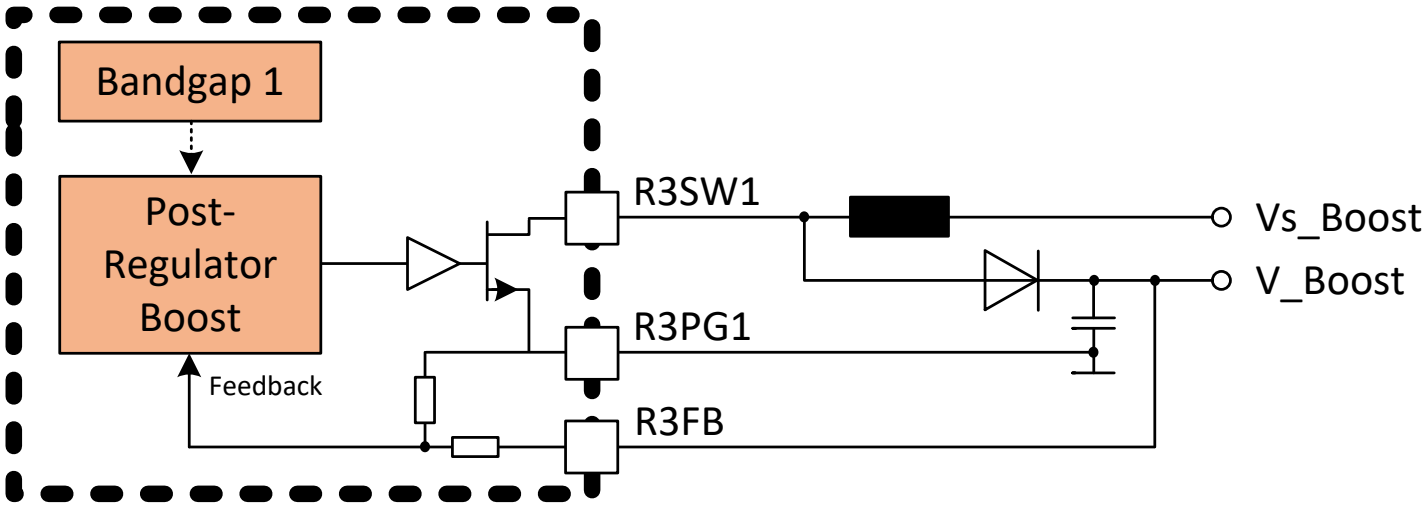

Copyright © Infineon Technologies AG 2024. All rights reserved.

OPTIREG™ PMIC TLF30682QV
State machine

Detail state machine

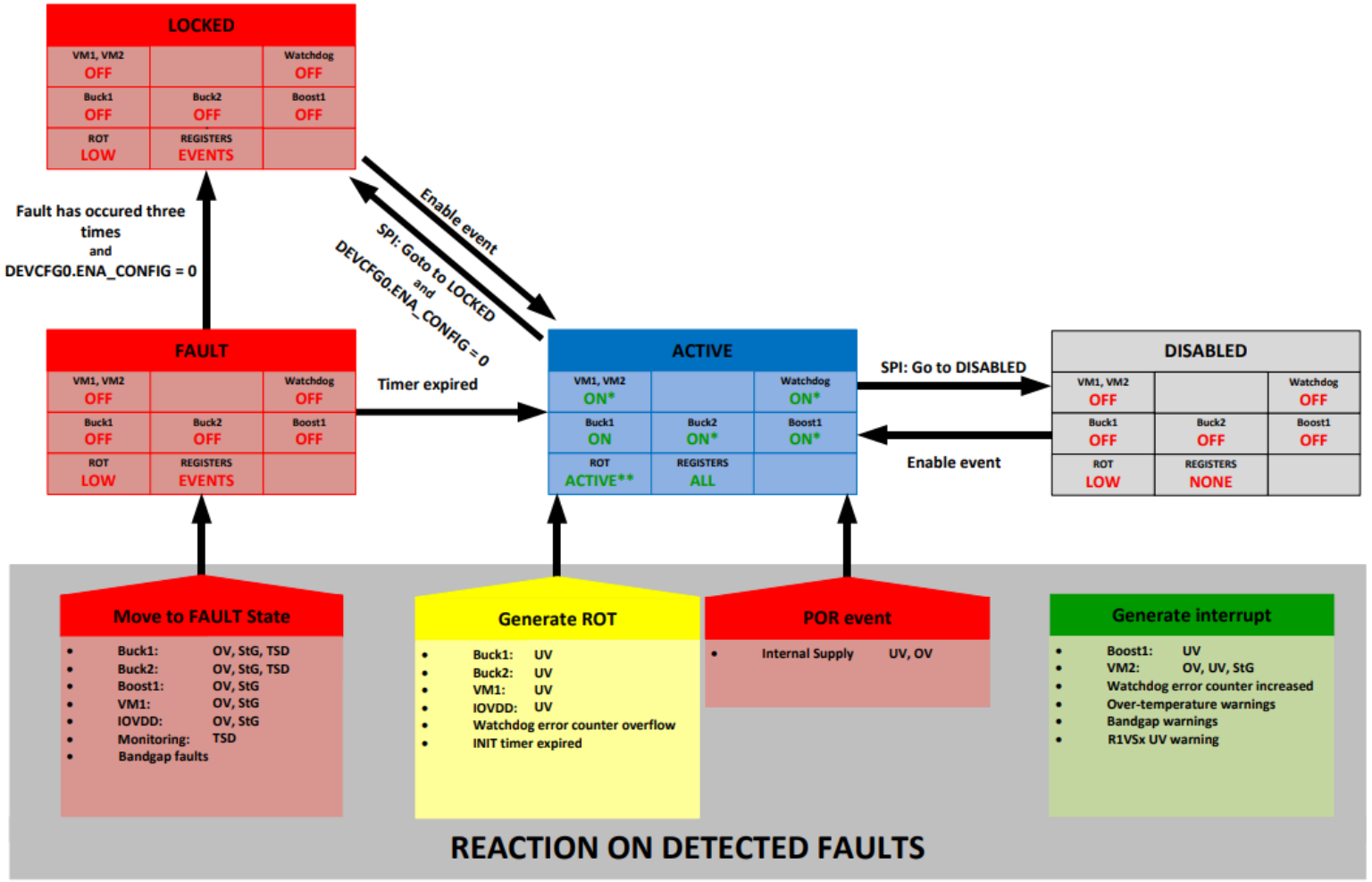

*: Switched ON by entering the ACTIVE then selectable via SPI

**: ROT will be ACTIVE (pulled high) after the reset delay time has expired

Copyright © Infineon Technologies AG 2024. All rights reserved.

OPTIREG™ PMIC TLF30682QV
Additional Features

Features supporting functional safety

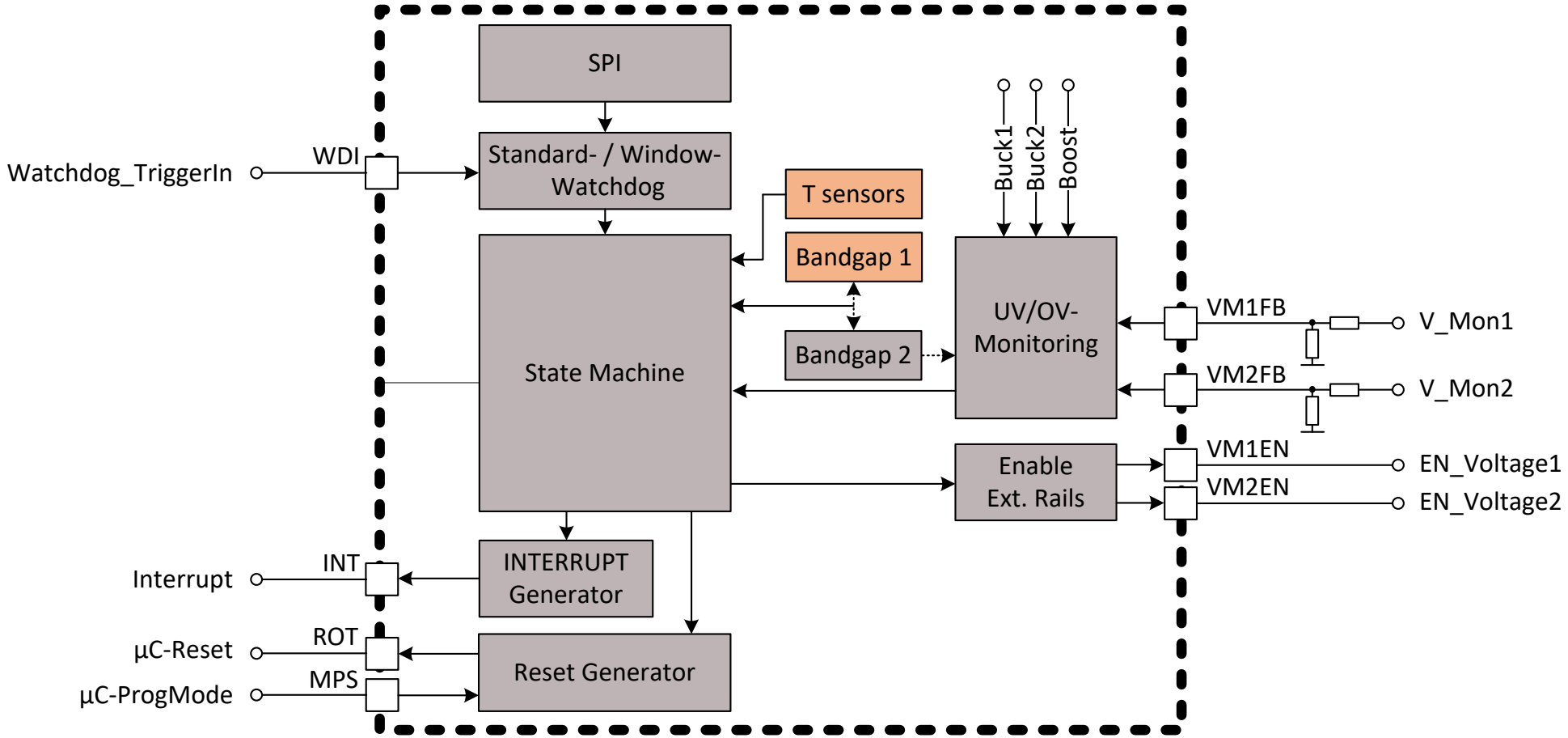

Copyright © Infineon Technologies AG 2024. All rights reserved.

OPTIREG™ PMIC TLF30682QV
Additional Features

Features supporting functional safety

- Multiple T-sensors
  - Thermal warning
  - Thermal shut-down
- Multiple bandgaps
  - Mutual supervision of bandgaps

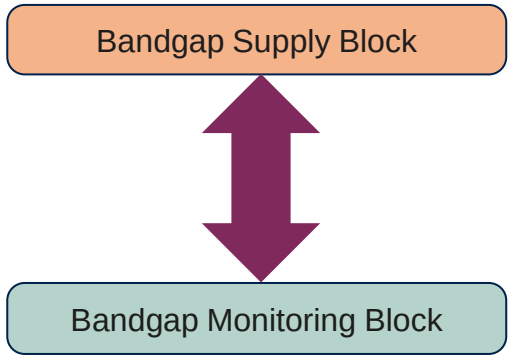

Copyright © Infineon Technologies AG 2024. All rights reserved.

OPTIREG™ PMIC TLF30682QV
Additional Features

Features supporting functional safety

- Voltage monitoring
  - UV/OV monitoring of Vbatt, Buck1, Buck2 and Boost
    - ±8% thresholds
  - Automatic monitoring for all active rails
  - Monitoring of 2 external supply rails
    - External voltage rail (e.g. external LDO, linear Post-Reg, SMPR, Tracker)
    - Enable and disable external voltage rails
    - Monitoring of external supply voltage
    - Fixed internal reference voltage
    - Voltage level set with external resistor divider

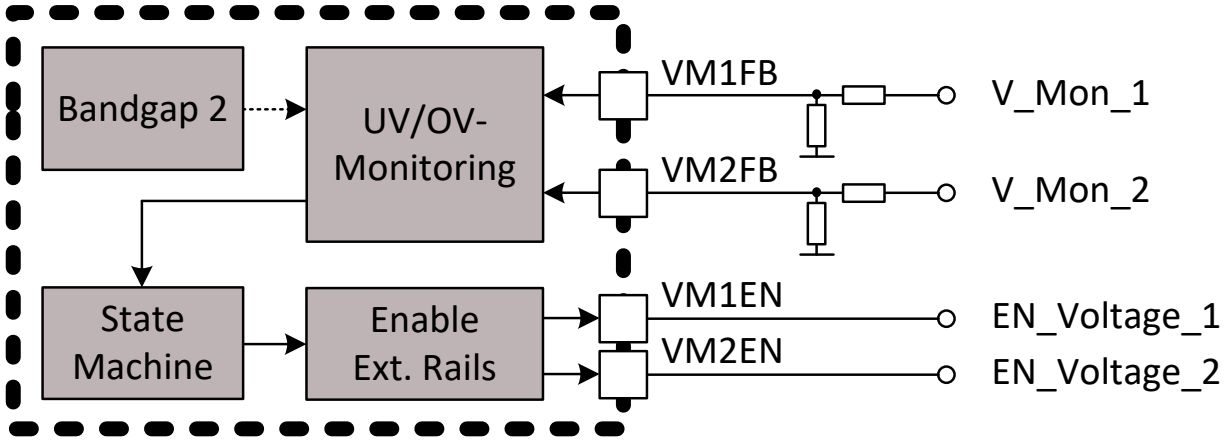

Copyright © Infineon Technologies AG 2024. All rights reserved.

OPTIREG™ PMIC TLF30682QV
Additional Features

Features supporting functional safety

- Window-Watchdog
  - Can be En-/Disabled
  - Standard-WD by setting Closed-Window to 0ms
  - Error counters for WWD with selectable threshold
  - Programmable open and closed window sizes
  - After POR windows watchdog is active with long window size (600ms).

    MCU needs to reconfigure during this time.

Copyright © Infineon Technologies AG 2024. All rights reserved.

Table of contents

1 OPTIREG™ families: Power for microcontrollers 3

2 OPTIREG™ PMIC TLF30682QV at a glance 22

3 OPTIREG™ PMIC TLF30682QV details 27

4 **OPTIREG™ PMIC TLF30682QV benefits 41**

5 OPTIREG™ PMIC TLF30682QV applications: 77GHz-Radar, camera 44

6 Support 53

Copyright © Infineon Technologies AG 2024. All rights reserved.

OPTIREG™ PMIC TLF30682QV
Benefits

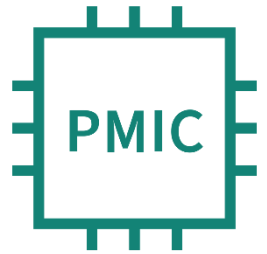

OPTIREG™

OPTIREG™ PMIC TLF30682QV
Benefits

Design/BOM benefits

- Minimization / reduce number of external components
  - No diodes due to active LS (Buck1/Buck2)
  - No bootstrap-cap for Buck2
  - No ext. resistor dividers

    (e.g. 2 resistors for each buck; no accuracy impact)

Copyright © Infineon Technologies AG 2024. All rights reserved.

Table of contents

1 OPTIREG™ families: Power for microcontrollers 3

2 OPTIREG™ PMIC TLF30682QV at a glance 22

3 OPTIREG™ PMIC TLF30682QV details 27

4 OPTIREG™ PMIC TLF30682QV benefits 41

5 OPTIREG™ PMIC TLF30682QV applications: 77GHz-Radar, camera 44

6 Support 53

Copyright © Infineon Technologies AG 2024. All rights reserved.

OPTIREG™ PMIC TLF30682QV
Applications: 77GHz-Radar, Camera

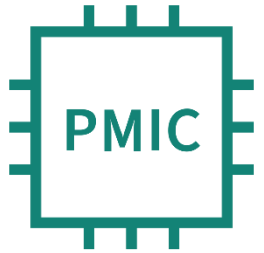

OPTIREG™

OPTIREG™ PMIC for a safe and optimized multi-channel power supply of Infineon µC families

IFX offers a PMIC suitable for ADAS application in combination with AURIX™ TC2x/TC3x portfolio

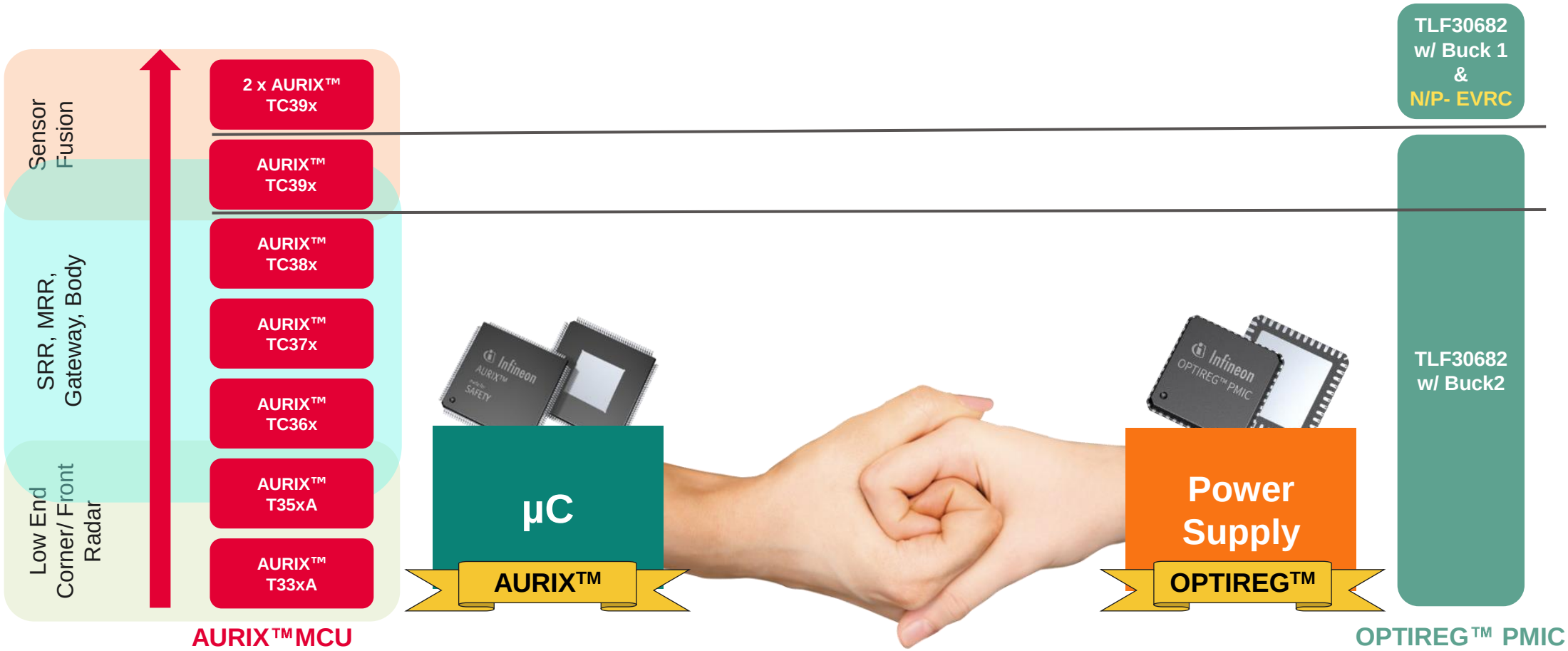

Copyright © Infineon Technologies AG 2024. All rights reserved.

OPTIREG™ PMIC TLF30682QV is complementing Infineon's P2S chip-set for RADAR applications

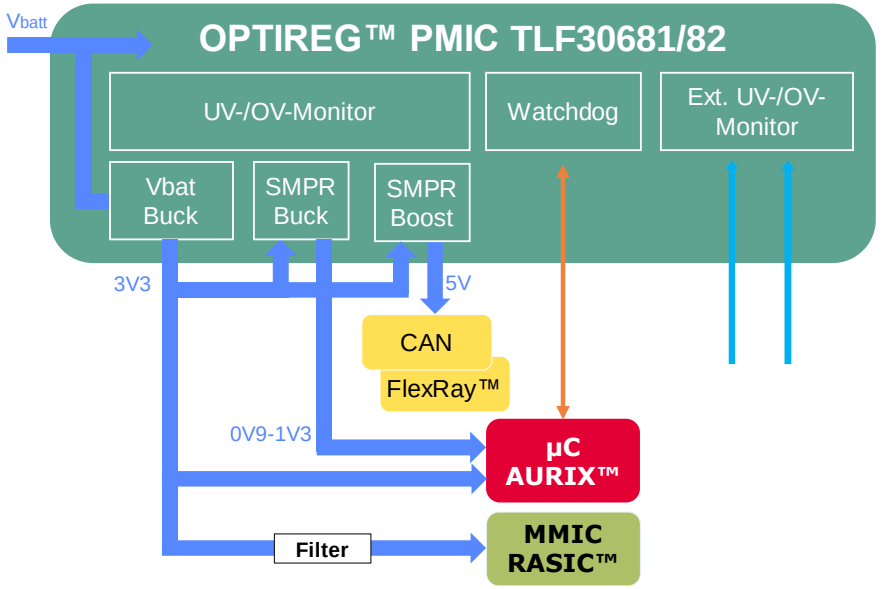

OPTIREG™ PMIC TLF30682QV:

Perfect fit in Radar together with

- **TC3xx AURIX™ µC**
- **RXS81xx MMIC**

as single ECU-supply with monitor- and supervisory-features

Radar

Sense	Compute	Supply	Network

Short-Range RADAR
- **1x 30682**
- 1x TC33x/35x
- 1x RXS8156/8161
- 1x TLE9250

Long-Range RADAR
- **1x TLF30682**
- 1x TC39x
- 2x RXS8161
- 1x TLE9250

P2S — AURIX™ • RASIC™ MMIC • OPTIREG™ PMIC

Mid-Range RADAR
- **1x TLF30682**
- 1x TC35x
- 1x RXS8161
- 1x TLE9250

High-Resolution RADAR
- **2x TLF30682**
- 1x TLS4135
- 2x TC39x
- 4-5x RXS8161
- 1x TLE9250

P2S Radar = RASIC™ + AURIX™ + OPTIREG™

Copyright © Infineon Technologies AG 2024. All rights reserved.

TLF30682QV
Radar (QM/ASIL-B) Supply Architecture

Radar PMIC OPTIREG™

Block Diagram MMIC supply

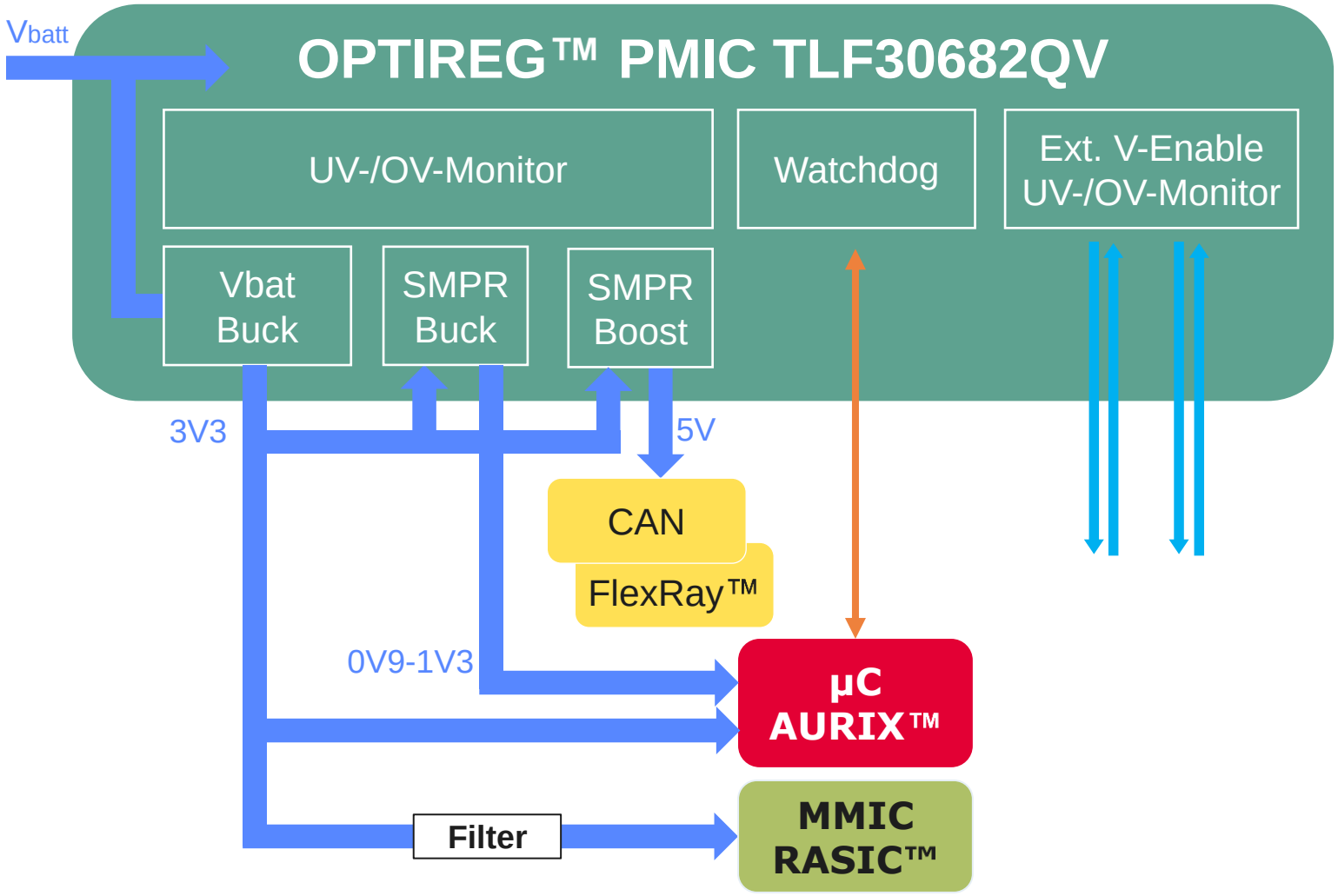

Copyright © Infineon Technologies AG 2024. All rights reserved.

77GHz Radar (QM/ASIL-B) Application Diagram

Radar PMIC OPTIREG™

Application Diagram 77GHz radar

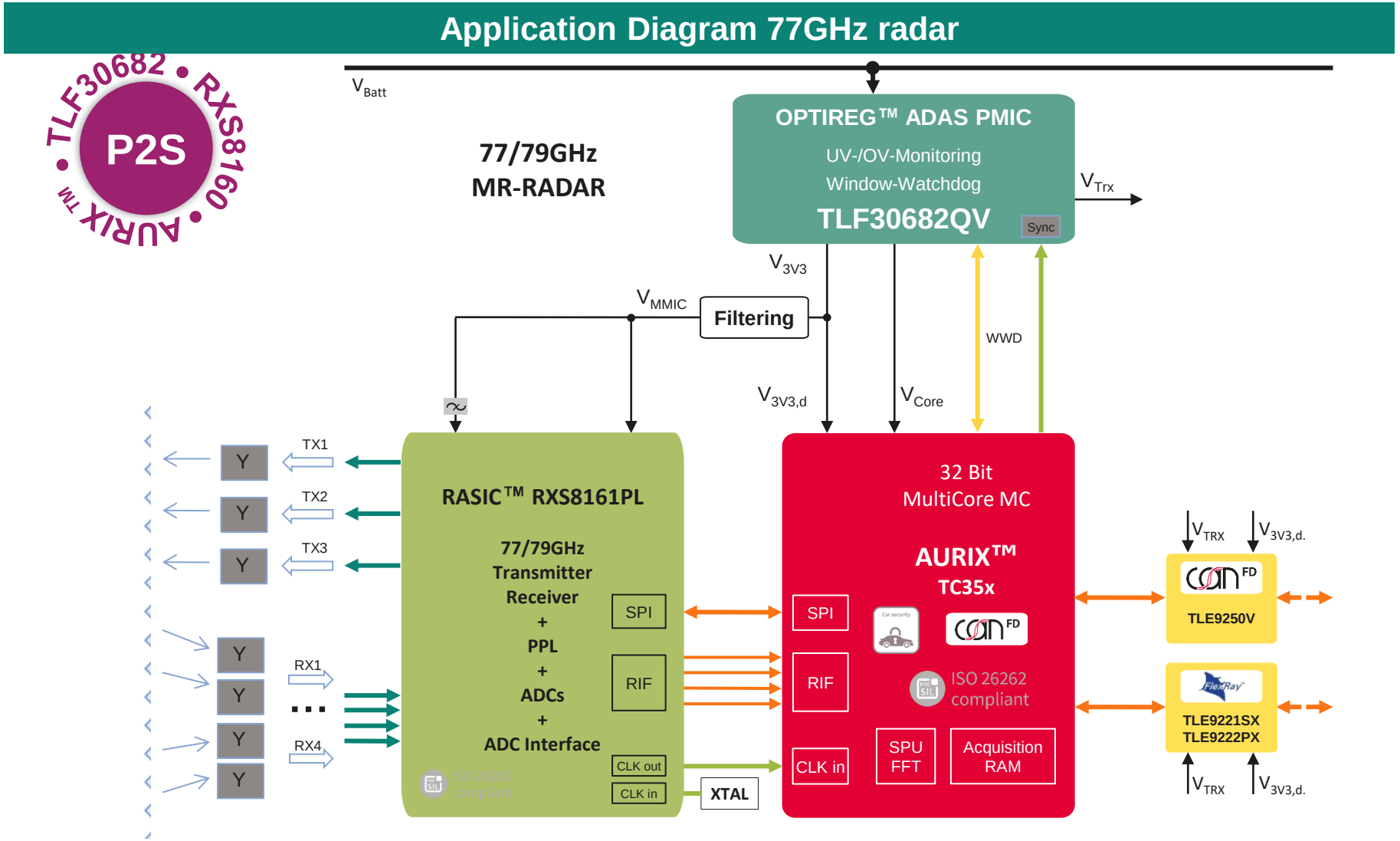

Copyright © Infineon Technologies AG 2024. All rights reserved.

TLF30682QV
Camera System Supply Backbone

Radar PMIC OPTIREG™

Block Diagram camera supply

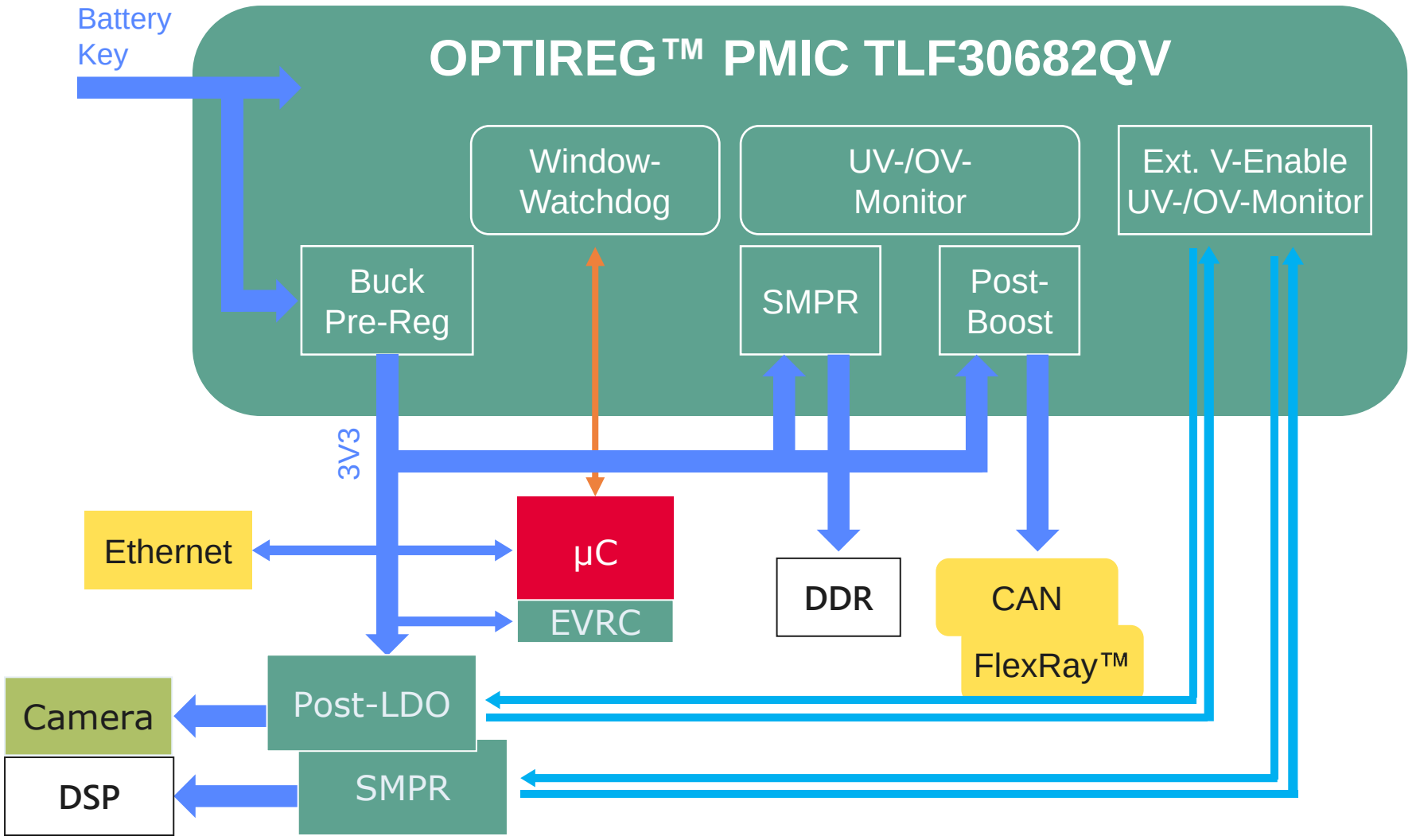

Copyright © Infineon Technologies AG 2024. All rights reserved.

Vision Applications
Multi-purpose Camera System Solution

Radar PMIC OPTIREG™

Application Diagram multi purpose camera system

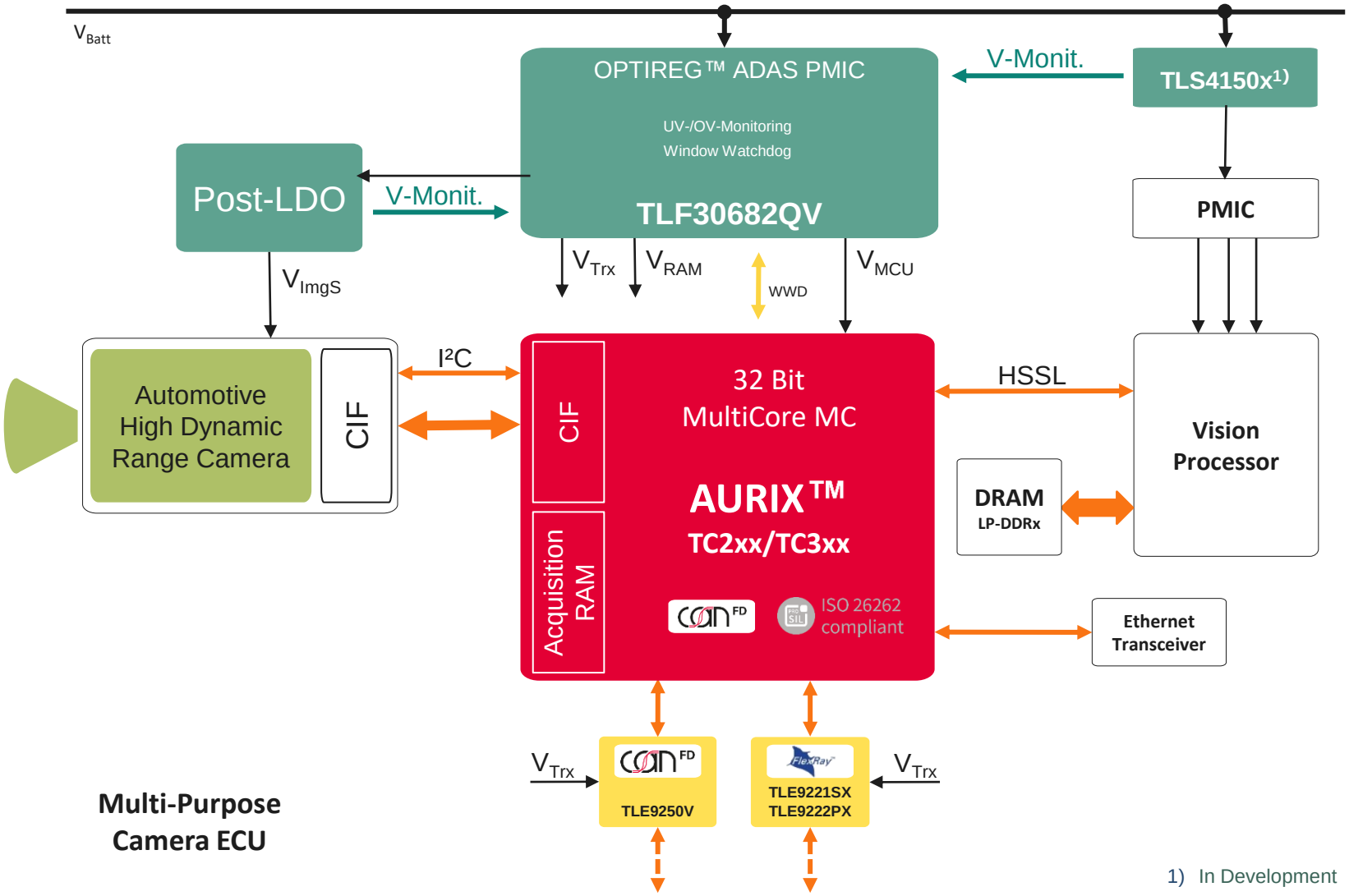

1) In Development

Copyright © Infineon Technologies AG 2024. All rights reserved.

Table of contents

1 OPTIREG™ families: Power for microcontrollers 3

2 OPTIREG™ PMIC TLF30682QV at a glance 22

3 OPTIREG™ PMIC TLF30682QV details 27

4 OPTIREG™ PMIC TLF30682QV benefits 41

5 OPTIREG™ PMIC TLF30682QV applications: 77GHz-Radar, camera 44

6 **Support** **53**

Copyright © Infineon Technologies AG 2024. All rights reserved.

OPTIREG™ PMIC TLF30682QV
Support

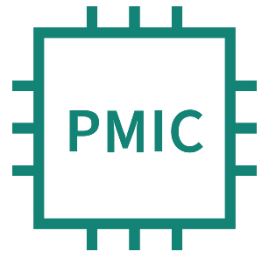

OPTIREG™

OPTIREG™ TLF3xx PMICs Naming Convention

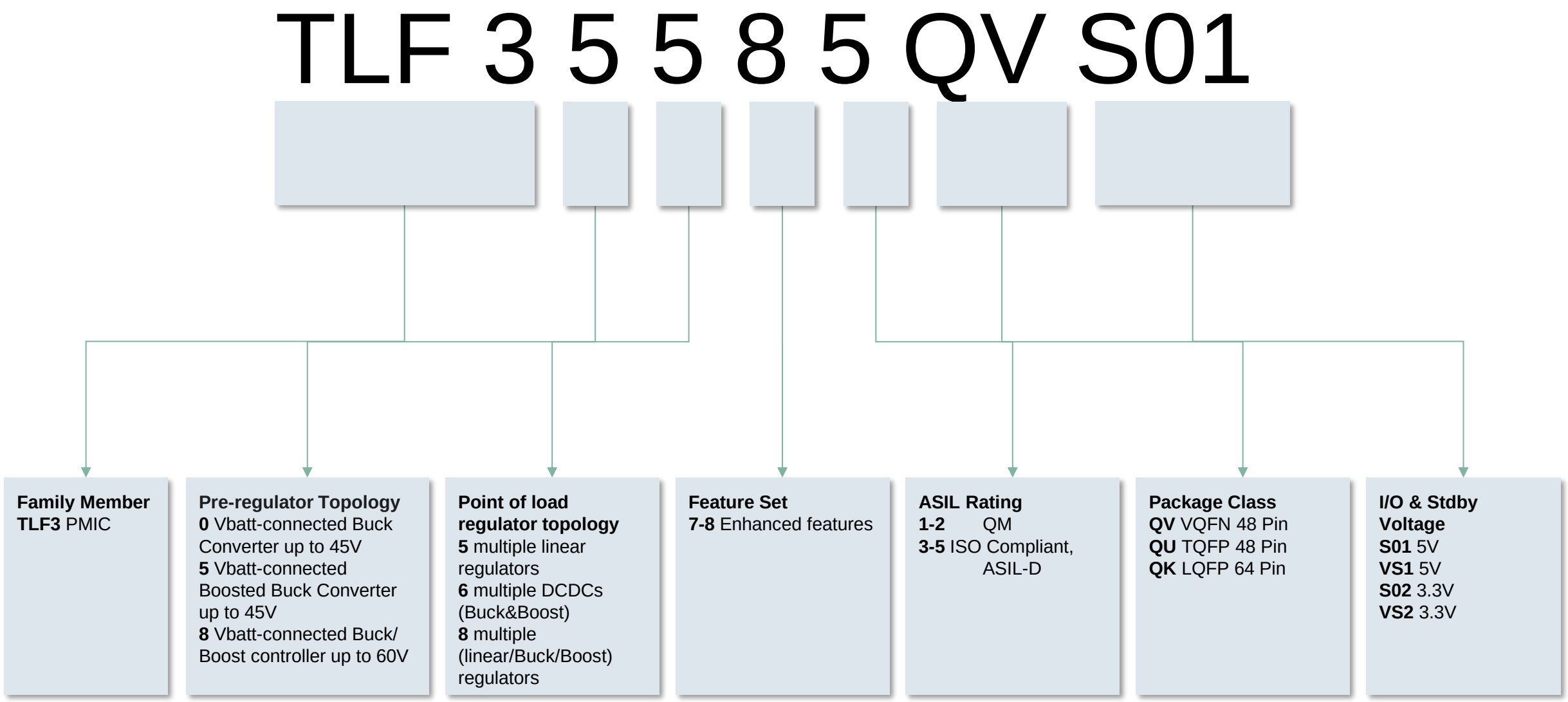

Copyright © Infineon Technologies AG 2024. All rights reserved.

TLF30682QV: Support

Collaterals and Brochures	– Product Brief – Selection Guide – Application Brochure – Product Presentation – Press Releases, Ads	– Link to TLF30682 page
Technical Material	– Application Notes – Simulation Models – Datasheet, MCDS Files – PCB Design Data	
Evaluation Board	– Evaluation Board Design	– Link to TLF30682-board pages
Video	– Technical Video – Product Information Video	– Link to Video

Copyright © Infineon Technologies AG 2024. All rights reserved.

Support
Online tools and services

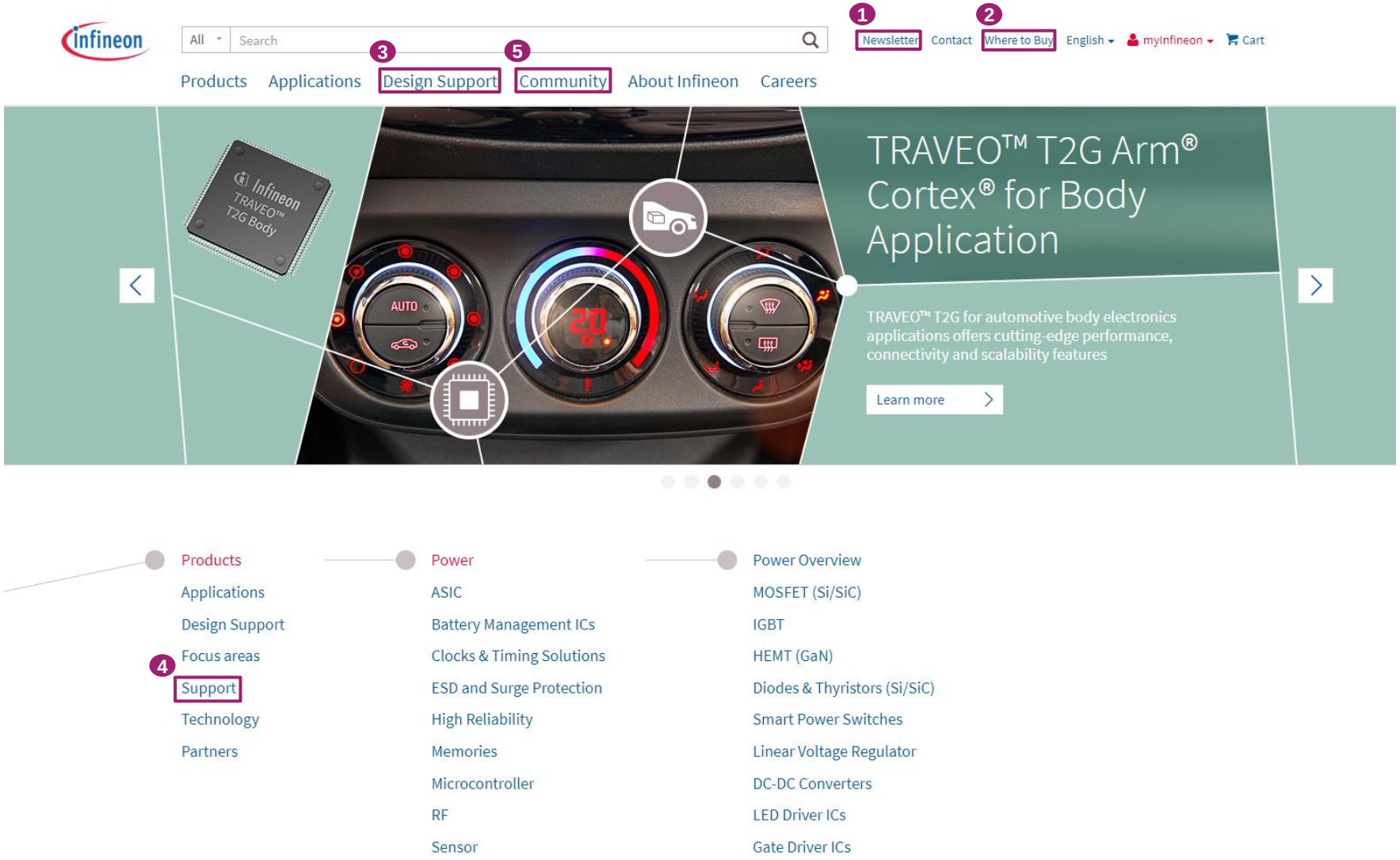

1. **Subscribe to Newsletter**
2. **Where to Buy**
3. **Tools, Finders and Selectors**
4. **Support**
5. **Community**

Copyright © Infineon Technologies AG 2024. All rights reserved.

MyInfineon

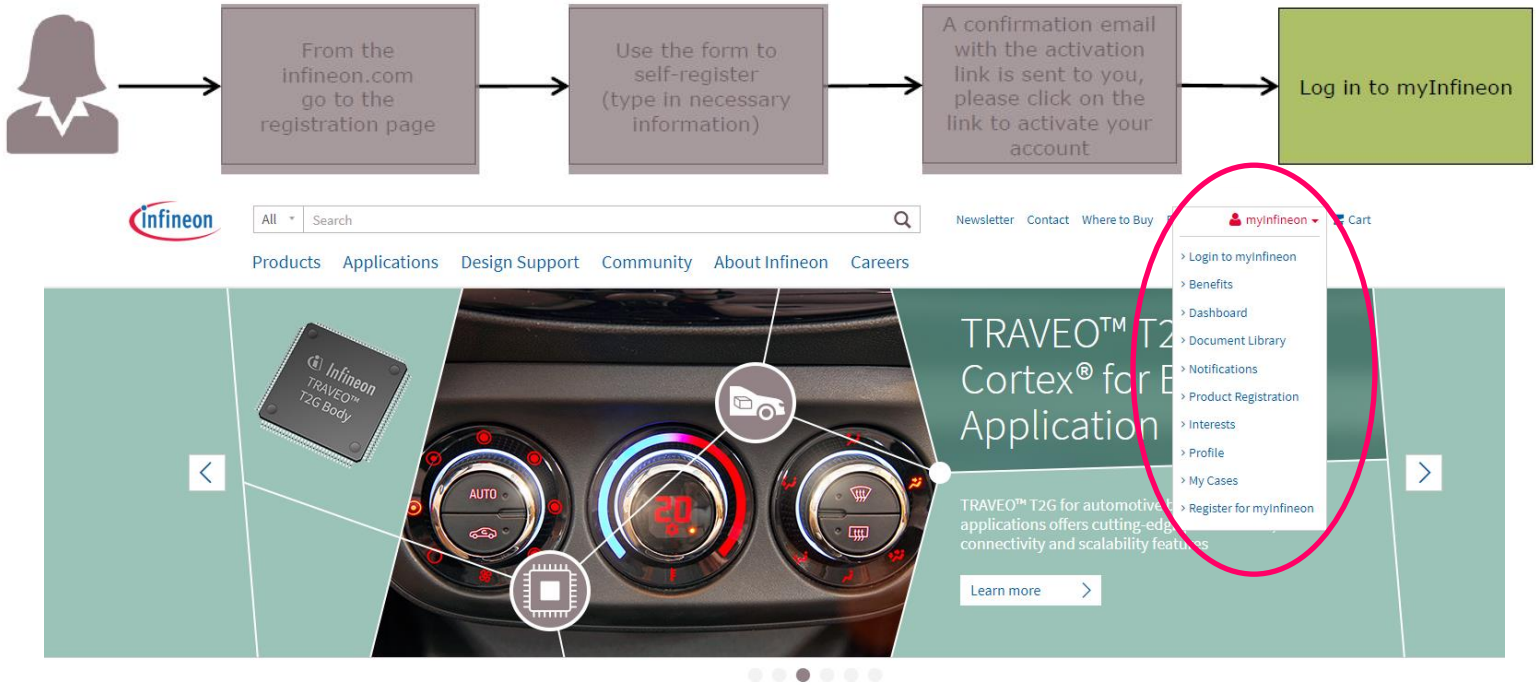



Copyright © Infineon Technologies AG 2024. All rights reserved.

My Infineon Collaboration Platform (MyICP)

What is MyICP ?

MyICP or **My Infineon Collaboration Platform** is a portal through which you can access all the documentation related to Infineon's microcontrollers.

While you may find plenty of details about Infineon microcontrollers on our official website, there are some **confidential** documents that require a › **Non-Disclosure Agreement (NDA)**. These can be accessed through MyICP.

How can I get acess to exclusive documentation

Step 1: Register to our MyInfineon platform

1. Sign up to MyInfineon › **here**

2. Type in the necessary information in the registration form

3 . Activate your account by clicking on the link in the e-mail sent to you

Step 2: Become a promoted user in MyInfineon

Registering as a user is not enough.

You need to be a promoted user in Infineon's network to access MyICP.

Send an e-mail to › optireg@infineon.com

Step 3: Get access to the required documentation

This step is only possible after Step 2, i.e. after your account has been successfully promoted. It requires you to wait till you get an email from us.

Copyright © Infineon Technologies AG 2024. All rights reserved.

TLF30682QV is online and a evaluation board is available for ordering

you will find: product datasheet, evaluation board, user manual and software

TLF30682QVS01 BOARD
development board to support you in testing the power capabilities of TLF30682QV. It can be used to connect supply, loads and sensors, providing easy access to all interfaces.

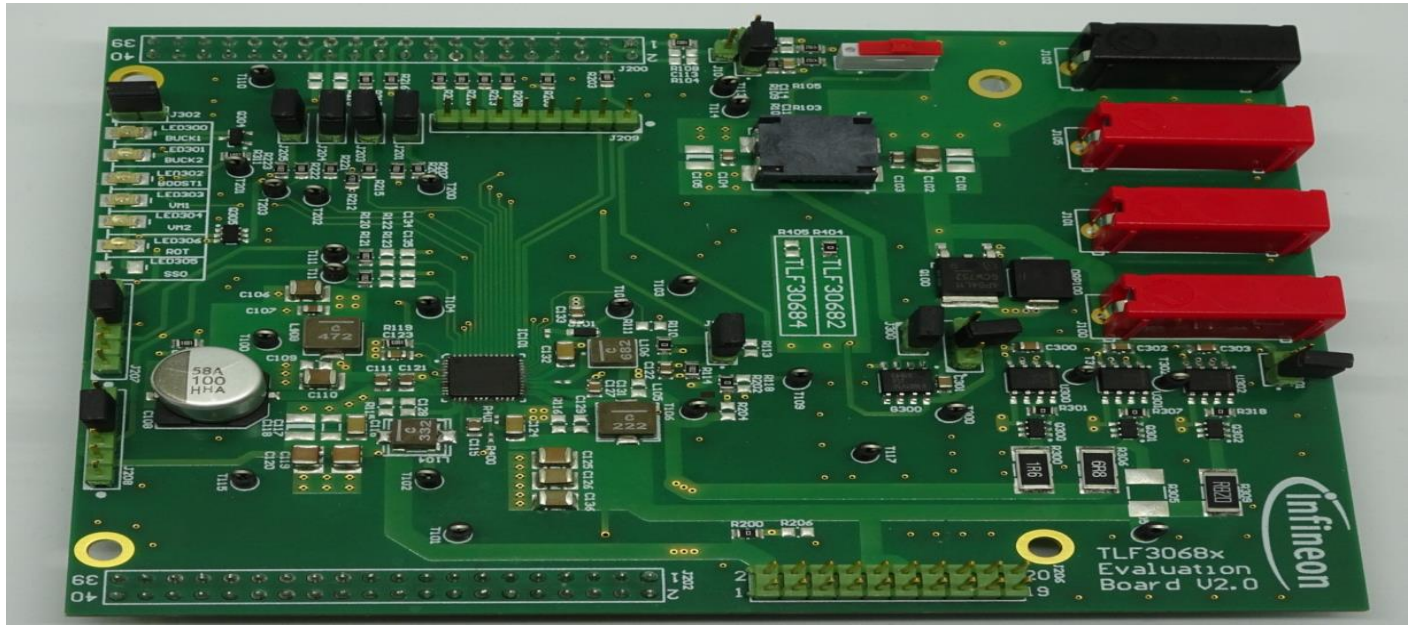

Copyright © Infineon Technologies AG 2024. All rights reserved.

OPTIREG™ PMIC TLF30682 QV
Additional Information

Order information

- TLF30682QVS01
  - OPN: TLF30682QVS01XUMA1
  - SP#: SP001588618
  - MA#: MA004807156 for productive material
  - SA#: SA004441512 for QS
- Evaluation Board TLF30682QVS01
  - OPN: TLF30682QVS01BOARDTOBO1
  - SP#: SP001622202

Copyright © Infineon Technologies AG 2024. All rights reserved.

Mapping of OPTIREG™ with various microcontrollers
Find the right OPTIREG™ for your microcontroller in just a few clicks!

Scan

Click

	Infineon AURIX™		Infineon Traveo™		Infineon	Texas Instruments	NXP	Renesas	ST Micro
OPTIREG™	TC2x	TC3x	I	II	PSoC®	Piccolo™/ Delfino™	S32K	RH850	SPC5x
	◎	◎	◎	◎	N/A	◎	◎	◎	◎
	◎	◎	◎	◎	◎	◎	◎	N/A	N/A
	◎	◎	◎	◎	N/A	◎	◎	N/A	N/A
	◎	◎	◎	◎	◎	◎	◎	◎	◎

Copyright © Infineon Technologies AG 2024. All rights reserved.

OPTIREG™ PMIC trainings

Title	Content
Online Course Infineon's automotive PMICs: OPTIREG™ PMIC (S1)	By the end of this training, users will: • Recognize devices out of the OPTIREG™ PMIC product family. • Identify Infineon's portfolio of PMICs, and know which devices are currently under development.
Online Course OPTIREG™ PMIC - Technical safety requirements and goals (E2)	By the end of this training, users will: • Understand the strategy of main functional safety features (TSRs) of OPTIREG™ Safety Power Management ICs (PMIC). • After the training, you will be aware of the benefits and scope of our Safety PMICs, that are provided to safety-related applications.

Click on the training title to access it

Copyright © Infineon Technologies AG 2024. All rights reserved.


Infineon