ESD18VU1B in TSLP and TSSLP

Tailored ESD protection for the NFC Frontend

Near Field Communication
-Technical overview
-Frontend ESD protection

Application Note AN244

Revision: Rev. 1.0
2010-09-28

RF and Protection Devices

Edition 2010-09-28

Published by
Infineon Technologies AG
81726 Munich, Germany

© 2010 Infineon Technologies AG
All Rights Reserved.

Legal Disclaimer

The information given in this document shall in no event be regarded as a guarantee of conditions or characteristics. With respect to any examples or hints given herein, any typical values stated herein and/or any information regarding the application of the device, Infineon Technologies hereby disclaims any and all warranties and liabilities of any kind, including without limitation, warranties of non-infringement of intellectual property rights of any third party.

Information

For further information on technology, delivery terms and conditions and prices, please contact the nearest Infineon Technologies Office (**www.infineon.com**).

Warnings

Due to technical requirements, components may contain dangerous substances. For information on the types in question, please contact the nearest Infineon Technologies Office.

Infineon Technologies components may be used in life-support devices or systems only with the express written approval of Infineon Technologies, if a failure of such components can reasonably be expected to cause the failure of that life-support device or system or to affect the safety or effectiveness of that device or system. Life support devices or systems are intended to be implanted in the human body or to support and/or maintain and sustain and/or protect human life. If they fail, it is reasonable to assume that the health of the user or other persons may be endangered.

Application Note AN244

Revision History: 2010-09-28

Previous Revision: prev. Rev. x.x

Page	Subjects (major changes since last revision)

Trademarks of Infineon Technologies AG

A-GOLD™, BlueMoon™, COMNEON™, CONVERGATE™, COSIC™, C166™, CROSSAVE™, CanPAK™, CIPOS™, CoolMOS™, CoolSET™, CONVERPATH™, CORECONTROL™, DAVE™, DUALFALC™, DUSLIC™, EasyPIM™, EconoBRIDGE™, EconoDUAL™, EconoPACK™, EconoPIM™, E-GOLD™, EiceDRIVER™, EUPEC™, ELIC™, EPIC™, FALC™, FCOS™, FLEXISLIC™, GEMINAX™, GOLDMOS™, HITFET™, HybridPACK™, INCA™, ISAC™, ISOFACE™, IsoPACK™, IWORX™, M-GOLD™, MIPAQ™, ModSTACK™, MUSLIC™, my-d™, NovalithIC™, OCTALFALC™, OCTAT™, OmniTune™, OmniVia™, OptiMOS™, OPTIVERSE™, ORIGA™, PROFET™, PRO-SIL™, PrimePACK™, QUADFALC™, RASIC™, ReverSave™, SatRIC™, SCEPTRE™, SCOUT™, S-GOLD™, SensoNor™, SEROCCO™, SICOFI™, SIEGET™, SINDRION™, SLIC™, SMARTi™, SmartLEWIS™, SMINT™, SOCRATES™, TEMPFET™, thinQ!™, TrueNTRY™, TriCore™, TRENCHSTOP™, VINAX™, VINETIC™, VIONTIC™, WildPass™, X-GOLD™, XMM™, X-PMU™, XPOSYS™, XWAY™.

Other Trademarks

AMBA™, ARM™, MULTI-ICE™, PRIMECELL™, REALVIEW™, THUMB™ of ARM Limited, UK. AUTOSAR™ is licensed by AUTOSAR development partnership. Bluetooth™ of Bluetooth SIG Inc. CAT-iq™ of DECT Forum. COLOSSUS™, FirstGPS™ of Trimble Navigation Ltd. EMV™ of EMVCo, LLC (Visa Holdings Inc.). EPCOS™ of Epcos AG. FLEXGO™ of Microsoft Corporation. FlexRay™ is licensed by FlexRay Consortium. HYPERTERMINAL™ of Hilgraeve Incorporated. IEC™ of Commission Electrotechnique Internationale. IrDA™ of Infrared Data Association Corporation. ISO™ of INTERNATIONAL ORGANIZATION FOR STANDARDIZATION. MATLAB™ of MathWorks, Inc. MAXIM™ of Maxim Integrated Products, Inc. MICROTEC™, NUCLEUS™ of Mentor Graphics Corporation. Mifare™ of NXP. MIPI™ of MIPI Alliance, Inc. MIPS™ of MIPS Technologies, Inc., USA. muRata™ of MURATA MANUFACTURING CO. OmniVision™ of OmniVision Technologies, Inc. Openwave™ Openwave Systems Inc. RED HAT™ Red Hat, Inc. RFMD™ RF Micro Devices, Inc. SIRIUS™ of Sirius Sattelite Radio Inc. SOLARIS™ of Sun Microsystems, Inc. SPANSION™ of Spansion LLC Ltd. Symbian™ of Symbian Software Limited. TAIYO YUDEN™ of Taiyo Yuden Co. TEAKLITE™ of CEVA, Inc. TEKTRONIX™ of Tektronix Inc. TOKO™ of TOKO KABUSHIKI KAISHA TA. UNIX™ of X/Open Company Limited. VERILOG™, PALLADIUM™ of Cadence Design Systems, Inc. VLYNQ™ of Texas Instruments Incorporated. VXWORKS™, WIND RIVER™ of WIND RIVER SYSTEMS, INC. ZETEX™ of Diodes Zetex Limited.

Last Trademarks Update 2009-10-19

Table of Content

1 Near Field communication - Overview 5

2 Current and future applications for NFC devices 7

3 NFC implementation in the mobile phone 8

4 Requirements for proper NFC frontend ESD protection 9

5 Summery 12

6 Authors 13

List of Figures

Figure 1 NFC Modules acting as tag/target (passive mode) or acting as initiator/reader (active mode) 5
Figure 2 Time domain RF simulation of the NFC principle 6
Figure 3 RF envelope (13.56MHz) @ the primarty res., toggling the secondary res. lossless/lossy 6
Figure 4 NFC Modules both in active mode (e.g. in a P2P network) 7
Figure 5 Implementation of a NFC module in the mobile phone 8
Figure 6 Example for an NFC frontend in a mobile phone woking with a a loop antenna 9
Figure 7 Transforming EMI filter to reduce the harmonics and to increase the voltage swing across the resonant antenna circuit 9
Figure 8 Correct application for a Uni-directional TVS diode 10
Figure 9 Correct application for a Bi-directional TVS diode 10
Figure 10 TLP characteristic of an NFC TVS providing a R_dyn of about 0.6 Ohm 11
Figure 11 TLP measurement setup 12

1 Near Field communication - Overview

Near Field Communication or NFC, is a short-range high frequency wireless communication technology which enables the exchange of data between devices over about a 10…20 centimeter distance. The technology is a simple extension of the ISO/IEC 14443 proximity-card standard (proximity card, RFID) that combines the interface of a smartcard and a reader into a single device. An NFC device can communicate with both existing ISO/IEC 14443 smartcards and readers, as well as with other NFC devices, and is thereby compatible with existing contactless infrastructure already in use for public transportation and payment. NFC is primarily aimed at usage in mobile phones.

NFC communicates via magnetic field induction, where two loop antennas are located within each other's near field, forming an air-core transformer (figure 1, figure 2 and figure 4). It operates within the globally available and unlicensed radio frequency ISM band (Industrial, Scientific and Medical) of 13.56 MHz.

- Working distance with compact standard antennas: up to 20 cm
- Supported data rates: 106, 212, 424 kbit/s
- Manchester coding with 10% ASK (Amplitude Shift Keying) modulation rate
- Modified Miller coding with 100% ASK modulation rate
- NFC device can work in passive mode (battery off) and in active mode
    - card emulation: The NFC device behaves like an existing contactless card or RFID tag. The NFC device is passive and is triggered by an active initiator
    - reader mode: The NFC device (initiator) is active and read a passive RFID tag, for example for interactive advertising
    - P2P mode: Two NFC devices are communicating together and exchanging information. Both NFC devices has to be in the active mode

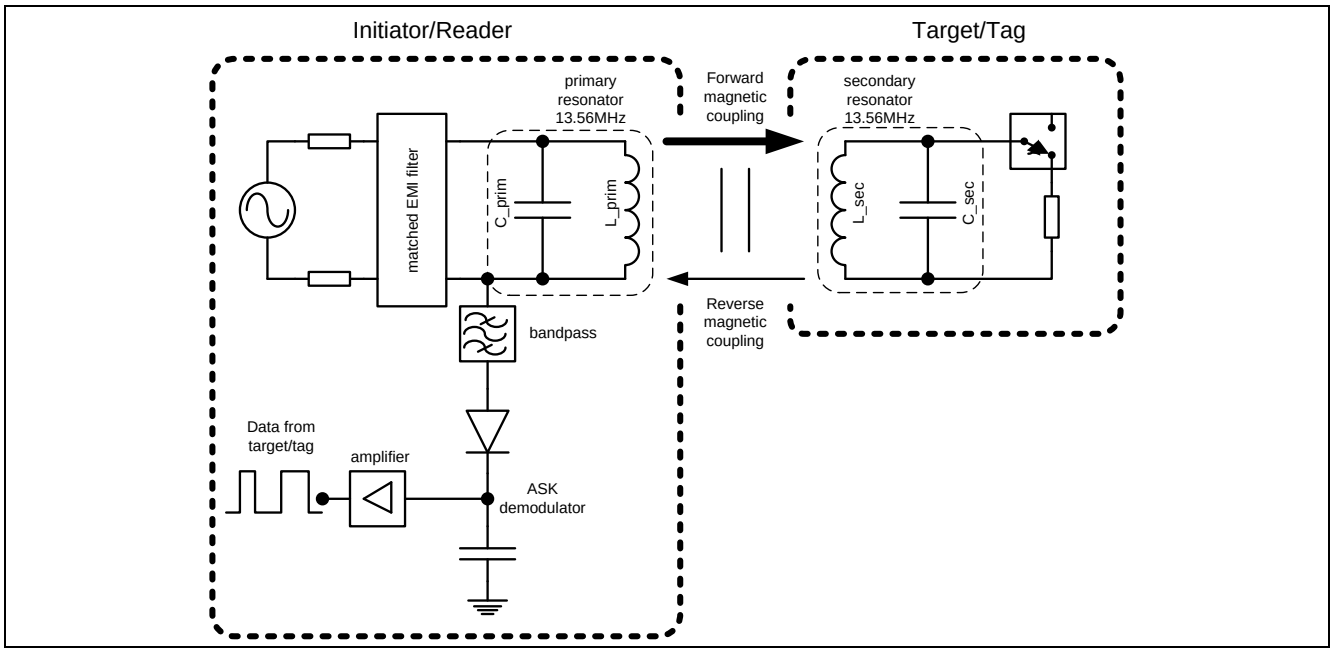

Figure 1 NFC Modules acting as tag/target (passive mode) or acting as initiator/reader (active mode)

1.1 Passive Communication Mode:

The initiator device provides a magnetic carrier field and the NFC device (target) answers by modulating the existing magnetic field. In this mode, the target device creates its operating power from the initiator provided electromagnetic field, thus making the Target device a transponder.

This mode is similar to the RFID (Radio Frequency Identification Device) working mode.

The basic principle of this passive mode is the magnetic air coupling between Initiator´s (reader) primary coil L_prim and the the target coil L_sec on secondary side. Energy is transmitted from L_prim to L_sec and picked up on the secondary side (target) (forward response). On one hand the received magnetic energy is used to power the tag, on the other the received magnetic field is modulated. The tag is responding by modulating the Q-factor of the secondary resonance circuit L_sec/C_sec by switching on and off a shunt resistor according to the data sequence. This periodic attenuation of the secondary resonance circuit is visible on primary side (reverse response) and can be detected. The reverse response is reduced by reducing the coupling factor k, as a result of increasing the distance between the initiator (primary) and the target (secondary)

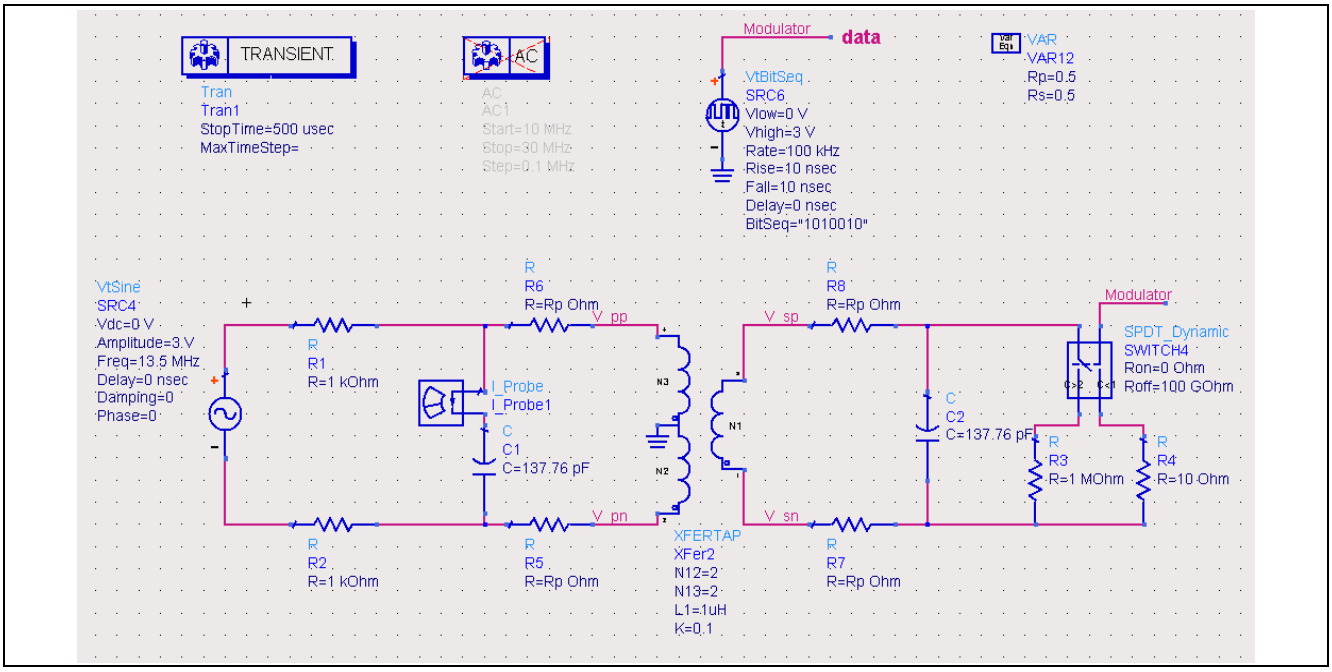

Figure 2 Time domain RF simulation of the NFC principle

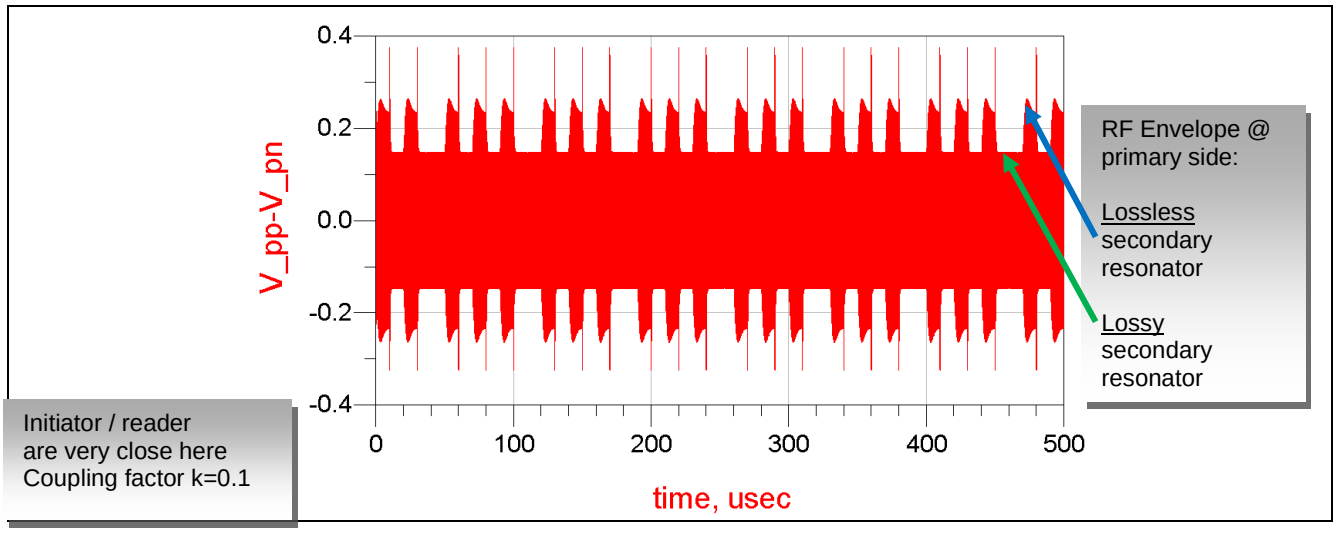

Figure 3 RF envelope (13.56MHz) @ the primarty res., toggling the secondary res. lossless/lossy

1.2 Active Communication Mode:

Running this mode the NFC device can act as an initiator (active reader) to get contact with a passive target.

Two NFC devices can act as initiator and target device and communicate by alternately generating their own modulated field. A device deactivates its RF field while it is waiting for data. In this mode, both devices typically need to have a power supply.

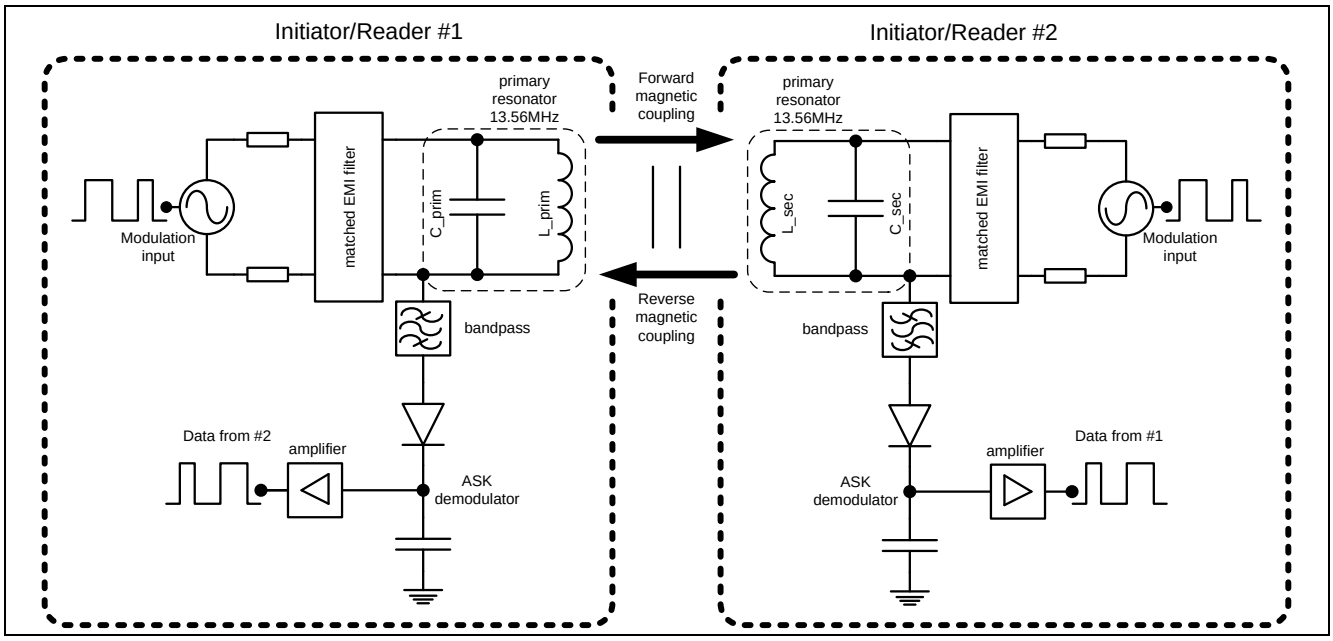

Figure 4 NFC Modules both in active mode (e.g. in a P2P network)

2 Current and future applications for NFC devices

Plenty of applications are present in the market yet, or will enter the market soon

- Mobile Commerce:
  - Mobile ticketing – for airplanes, for public transport, for concerts/events
  - Mobile payment — the device acts as a debit/ credit payment card.
  - Electronic money – like a stored value card
- Proof of Identity
  - Access control for buildings, or IT equipment
  - Electronic keys - car keys, house/office keys, hotel room keys, etc.

NFC can be used to configure and initiate other wireless network connections such as Bluetooth, Wi-Fi. The time consuming configuration procedure for identification to a Bluetooth or WiFi system is reduced by a “one touch” of two mobiles equipped with NFC devices

To provide the required security level for all these applications, the NFC modem is combined with a secure controller (NFC module). In a mobile phone the NFC module is also linked to the SIM card.

3 NFC implementation in the mobile phone

To provide a highly secure environment especially for mobile commerce, the entire NFC communication has to be controlled by several security authorities. Therefore the NFC modem is linked to the SIM card and to the secure controller.

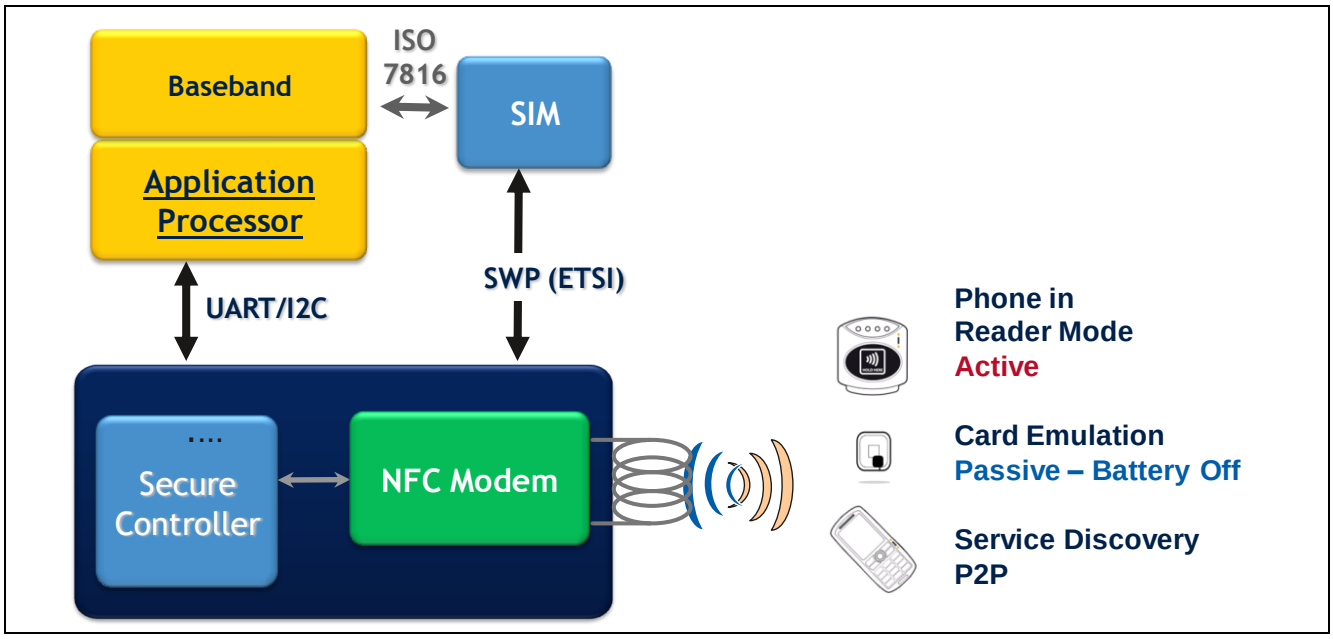

Figure 5 Implementation of a NFC module in the mobile phone

The signal generation and signal extraction is done completely in the NFC modem for the active mode as well as for the passive mode.

The front end of the NFC modem includes the mandatory transforming EMI filter and the magnetic loop antenna. This loop antenna inductor in combination with a capacitance provides the resonance circuit, tuned to 13.56 MHz.

The resonance circuit on primary side (initiator/reader) is coupled to the resonance circuit of secondary side (NFC modem in passive mode, target/tag). Coupling factor “k” is quite small and depends on the distance between reader and target.

The inductors L_prim and L_sec on primary and secondary side work as an air-coupled transformer with k<<1.

The distance between primary and secondary side is within the nearfield of the magnetic field. There is no conversion from magnetic energy to electrical and back (farfield behavior). Because of the very small antenna in relation to the wavelength at 13.56 MHZ, the conversion from magnetic nearfield distribution in an electromagnetic farfield distribution is very weak. This limits the range of an NFC system significant to < 20cm, even for special equipment to < 10m.

For passive mode (battery off mode) of the NFC module the NFC module is powered by the magnetic field of the initiator/reader and modulates this information data by switching his 13.56 MHZ resonance circuit between lossless and lossy mode. The loss of energy in the secondary resonance circuit, causes a feedback return to the primary resonance circuit and drops down the voltage slightly across the primary resonance circuit. (figure2, figure3)

This can be detected by an ASK demodulator and a logarithmic amplifier.

For the active mode the NFC modem can work as a (initiator/reader) and collects data from a passive target/tag.

To transmit data from one NFC module to another NFC module in a kind of peer to peer configuration, both NFC modules has to be in active mode and act as data transmitter and data receiver. In this case the TX signal is directly ASK modulated.

In a mobile phone the NFC frontend is often separated into the TX driver with the EMC filter and RX signal decoupling and the high impedance 13.56 MHz resonator. The 13.56 MHz resonator includes the loop antenna (resonator´s inductance) and a parallel capacitor (resonator´s capacitance).

Because of the loop antenna size, the 13.56 MHZ resonance circuit is located often in the bottom shell of the mobile, which can be removed by the user. An interface is generated inside the NFC frontend which then becomes ESD critical. A proper ESD protection becomes mandatory to protect the EMI filter and the driver of the NFC frontend, located on main mobile phone PCB.

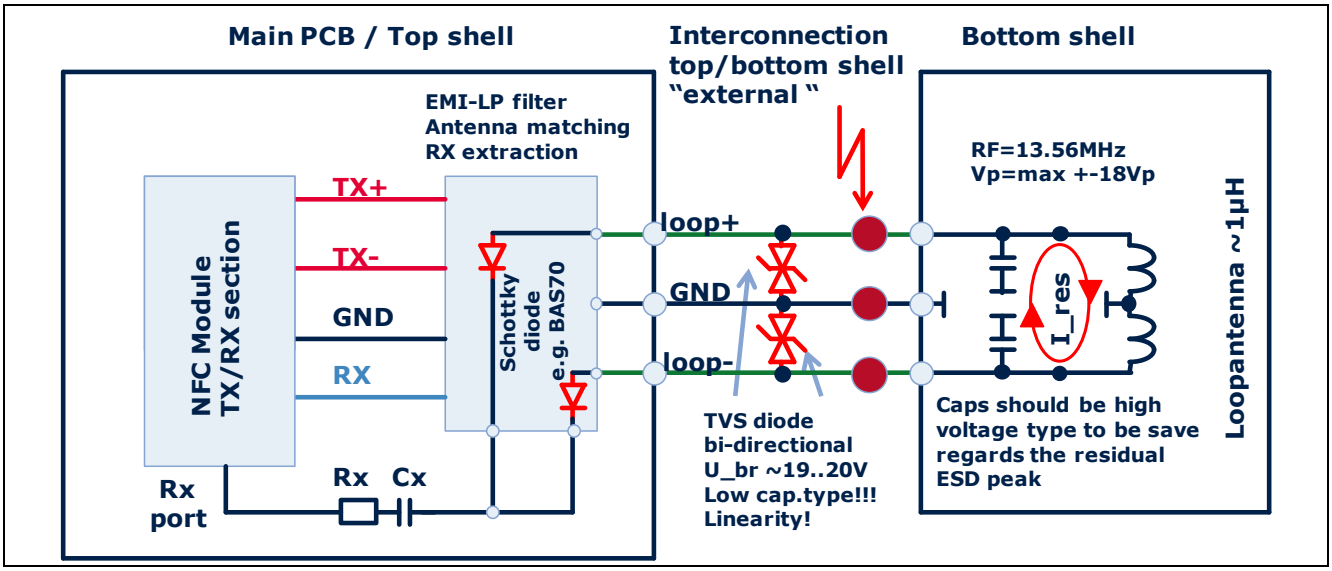

Figure 6 **Example for an NFC frontend in a mobile phone woking with a a loop antenna**

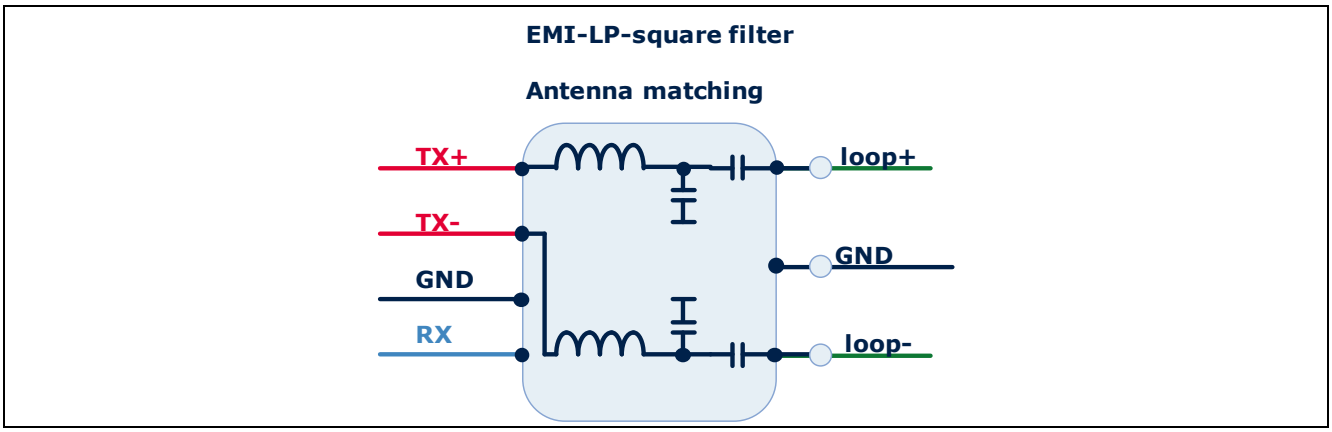

Figure 7 **Transforming EMI filter to reduce the harmonics and to increase the voltage swing across the resonant antenna circuit**

Beside the high impedance resonant loop antenna other antenna structures are possible, They might have different requirements for ESD protection. Please contact the local Infineon sales office for assistance.

4 Requirements for proper NFC frontend ESD protection

The RF signal (13.56 MHz) @ the resonator can be up to about +-18Vp vs. GND. Peak-Peak voltage is double this value (36Vpp). For the TVS diode connected to GND, this peak voltage vs. GND is important. The TVS diode has to be a so called **bi**-directional type, to be suitable for a wanted voltage swing of about +18Vp and for -18Vp. A **uni**-directional TVS diode would clip on negative voltage swings.

4.1 Uni-directional TVS diode vs. Bi-directional TVS diode

Uni-directional TVS diode:

A **uni-**directional TVS diode is designed for a wanted signal between ~0V and "maximum working voltage". The ESD protection capability is granted for a **uni**-directional diode for positive **AND** negative ESD strikes in the same way.

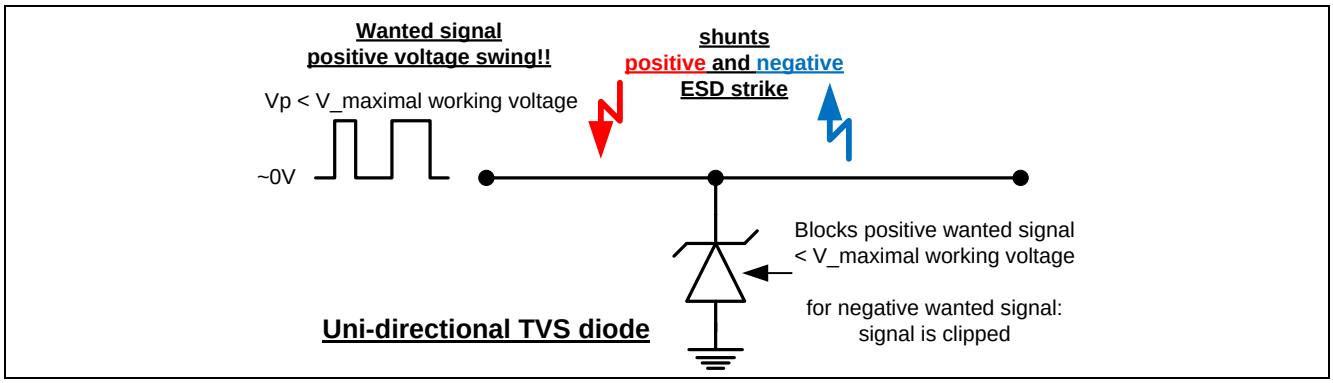

Figure 8 Correct application for a Uni-directional TVS diode

Bi-directional TVS diode:

A **bi**-directional TVS diode is designed for a wanted signal between "**negative** maximum working voltage". and "**positive** maximum working voltage". The ESD protection capability is granted for a **bi**-directional diode for positive **AND** negative ESD strikes in the same way.

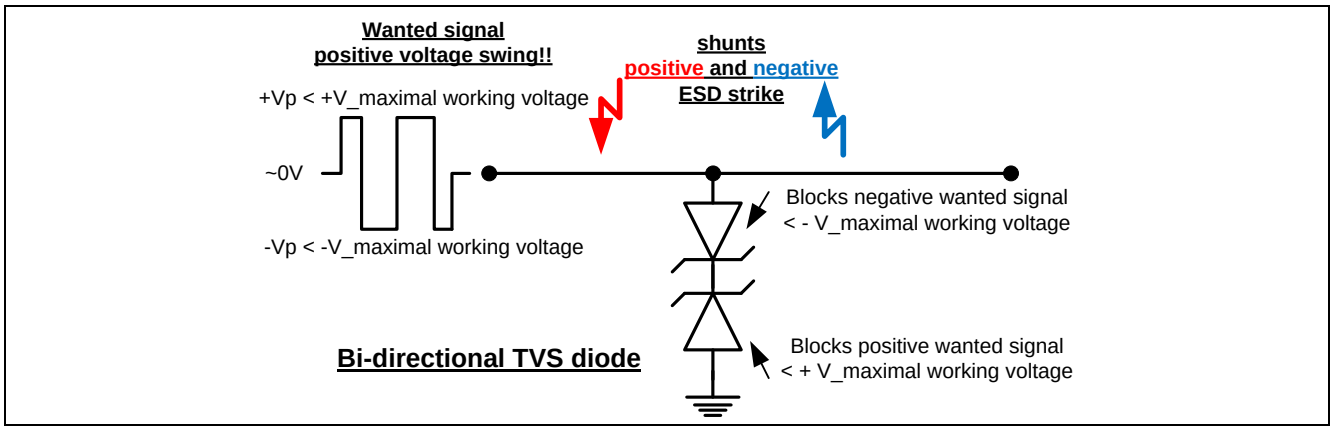

Figure 9 Correct application for a Bi-directional TVS diode

4.2 Principle of the transforming EMI filter

In the NFC system, the TX driver (low output impedance of some 10 Ohm) generates a differential 13.56 MHZ signal between 0V and may be 3V (~3V for a mobile phone application). The shape of this signal locks like a squarewave. This 0V/3V signal is fed to a transforming EMC filter (figure 7). One job of the transforming EMC filter is to eliminate all harmonics to avoid interference with the GSM masterclock @ 26.6 MHZ. The other function is to shift up the signal to a higher amplitude and impedance level. Impedance level is moving to about 1k Ohm or more and signal amplitude could become up to 18Vp (36Vpp) at the 13.56 MHZ resonator. The maximum resonator voltage depends on 1) the transformation relation and 2) loss in the transforming EMI filter and in the 13.56 MHZ resonance circuit. An impedance transformation to a very high impedance level (high voltage swing at the antenna makes the resonance circuit @ 13.56 MHZ very narrowband and very sensitive to parasitic effects or capacitive hand-effect caused by the user.

4.3 ESD requirements

Therefore “maximum working voltage” of the TVS diode has to fit with the maximum peak voltage @ the 13.56 MHZ resonator. This results in a “maximum working voltage” of about 18Vp for the TVS diode. Below this value the TVS diode is nearly a perfect “open circuit” and is NOT clipping the signal. The leakage current is below the maximum leakage current stated for the TVS device.

The correlating “minimal breakdown voltage” (defined @ a reverse current of 1mA) for the TVS diode is about 2V higher than the stated “maximum working voltage”

Increasing the “maximum working voltage” and inherently the “minimal breakdown voltage” significantly will reduce ESD performance because of higher residual clamping voltage (higher ESD stress for the EMC filter/NFC modem). So it is always a trade off between actual required “maximum working voltage” and the desired ESD performance.

Because the “maximum working voltage” is fixed by application, ESD performance optimization is possible only by minimizing the dynamic resistance (R_dyn) of the TVS diode. The R_dyn is the switch on resistance of a TVS diode in case of an ESD event. R_dyn should be as small as possible to keep the residual clamping voltage as small as possible. Optimizing R_dyn requires wide experience in TVS diode development and semiconductor technique (figure 10).

4.4 ESD protection in point of RF performancee

The ESD protection circuit should not create harmonic distortion to the 13.56 MHZ RF signal. Therefore the TVS diode has to be linear as much as possible.

The TVS diode´s “Maximum working voltage” has to be high enough to withstand the maximum peak voltage @ the 13.56 MHZ resonator without signal clipping. The IFX ESD18VU1B provides a “maximum working voltage” of 18V and fits very well. The ESD18VU1B is available in the leadless TSL-package whick correlates with SMD size 0402, or in the TSSL-package whicht fits to SMD size 0201.

The TVS diode capacitance has to be stable over the RF voltage swing. The diode capacitance (vs. GND) of the IFX ESD18VU1B is about 0.3pF and very stable up to 18V RF swing. for a system working @ 13.56 MHz, the variation of the TVS diode capacitance over the entire RF swing is very small.

4.5 ESD performance in point of residual ESD stress

The residual ESD voltage in case of an ESD strike depends on the TVS diode´s breakdown voltage and on the diodes´ “switch on” resistance (R_dyn). The dynamic resistance (R_dyn) can be characterised by the TLP (Transmission Line Pulse), where we feed a short, well defind current pulse through the diode and measure the clamping voltage across the TVS diode. This clamping voltage is visible to the subsequent circuit and can still cause a residual ESD stress for the device. The R_dyn for the IFX ESD18VU1B is 600 mOhm which is state of the art for such a TVS diode.

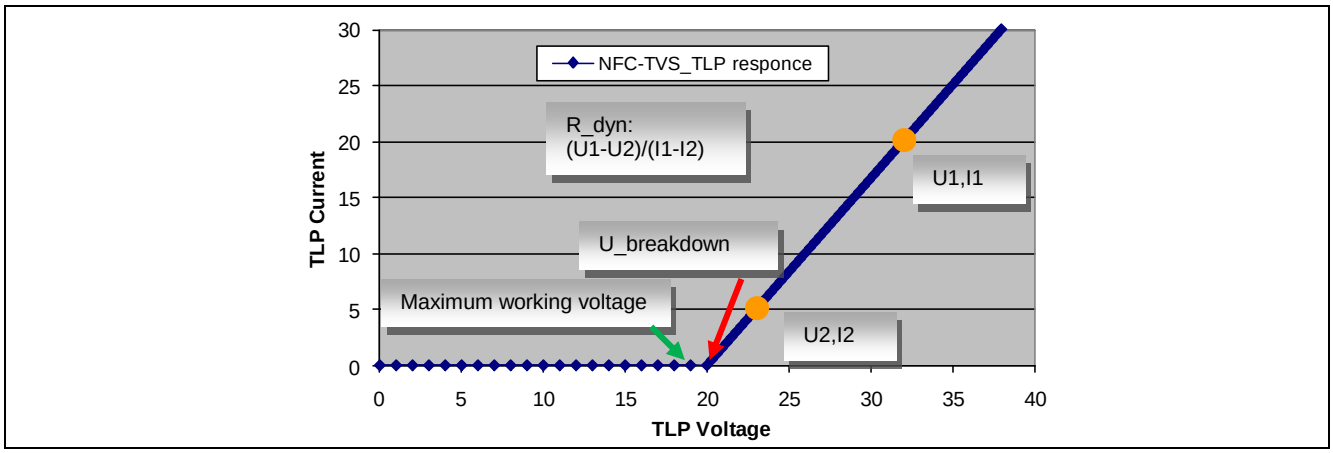

Figure 10 TLP characteristic of an NFC TVS providing a R_dyn of about 0.6 Ohm

4.6 Attachment: TLP measurement overview

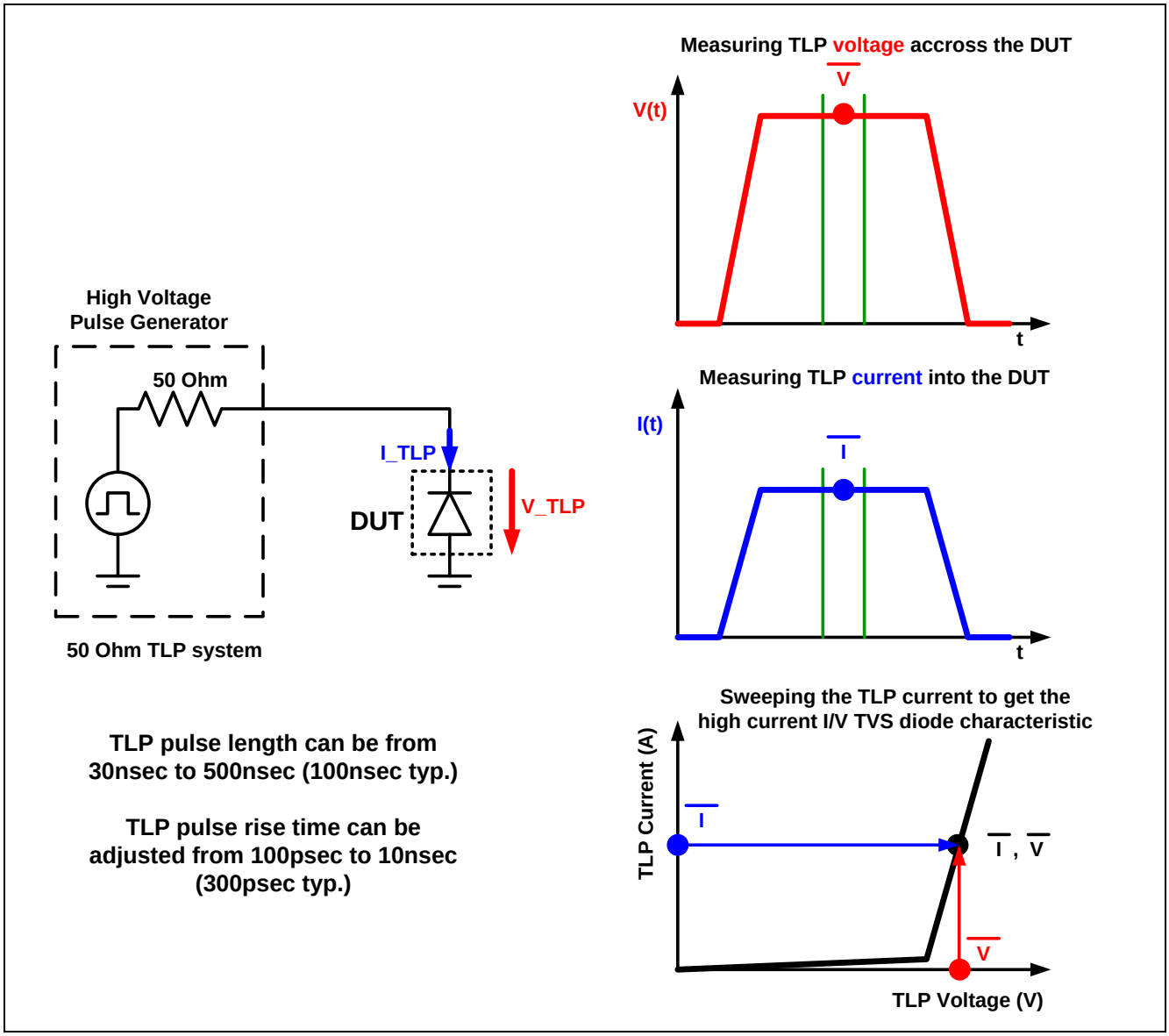

Figure 11 TLP measurement setup

5 Summery

ESD protection in the NFC frontend is easy to realize with application tailored TVS diodes. Numerous of basic conditions has to be addressed.

The Infineon ESD18VU1B isspecifically developed for this application. ESD18VU1B provides the right breakdown voltage in combination with a very low diode capacitance which keeps the non linear distortions very low. Package wise the ESD18VU1B is available in leadless package, correclating to SMD size 0402 (TSLP) and to SMD size 0201 (TSSLP).

6 Authors

Alexander Glas

Infineon: Senior Staff Engineer “RF and Protection Devices

w w w . i n f i n e o n . c o m

Published by Infineon Technologies AG

AN244