HiRel NPN Silicon RF Transistor

BFY405(ES)

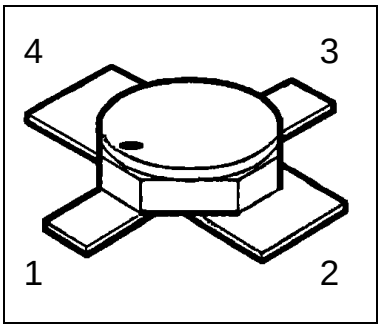

Features

- For Low Current Applications
- For Oscillators up to 12 GHz
- Noise Figure F = 1.15 dB at 1.8 GHz
  Outstanding G_{ms} = 23dB at 1.8 GHz
- Hermetically sealed microwave package
- Transition Frequency f_T = 20 GHz
- **SIEGET®25-Line**
  Infineon Technologies Grounded **E**mitter **T**ransistor-
  25 GHz f_T-**Line**

Product validation

- **esa Space Qualified**
  ESCC Detail Spec. No.: 5611/008
  Type Variant No. 01

Description

ESD: **E**lectro**s**tatic **d**ischarge sensitive device,
observe handling precautions!

Table 1 Product information

Type	Comment	Pin Configuration				Package
		1	2	3	4	
BFY405(ES)	For flight use	C	E	B	E	Micro-X
BFY405(P)[1]	Not for flight use[1]					

[1] (P) parts have the same fit, form and function as (ES) parts,
no screening acc. to Chart F3 in ESCC Generic Specification No. 5010

Table of contents

1 Maximum ratings

Table 2 Maximum ratings

Parameter	Symbol	Values			Unit	Note / Test Condition
		Min.	Typ.	Max.		
Collector-emitter voltage	V_{CEO}	-	-	4.5	V	
Collector-base voltage	V_{CBO}	-	-	15	V	
Emitter-base voltage	V_{EBO}	-	-	1.5	V	
Collector current	I_C	-	-	12	mA	
Base current	I_B	-	-	1	mA	
Total power dissipation [1]	P_{tot}	-	-	55	mW	$T_S \leq 145$ °C
Junction temperature	T_j	-	-	175	°C	
Operating temperature	T_{op}	-65	-	175	°C	
Storage temperature	T_{stg}	-65	-	175	°C	

[1] For $T_S > 145$ °C derating is required. T_S is measured on the collector lead at the soldering point to the PCB

2 Thermal characteristics

Table 3 Thermal characteristics

Parameter	Symbol	Values			Unit	Note / Test Condition
		Min.	Typ.	Max.		
Thermal resistance, junction –soldering point	$R_{th,JS}$	-	-	545	K/W	T_S is measured on the collector lead at the soldering point to the PCB
Soldering Temperature	T_{sol}	-	-	250	°C	Duration 5 seconds maximum at a distance of not less than 0.5mm from the device body and the same lead shall not be resoldered until 3 minutes have elapsed.

3 Electrical characteristics

at T_A=25°C, unless otherwise specified

Table 4 Static characteristics

Parameter	Symbol	Values			Unit	Note / Test Condition
		Min.	Typ.	Max.		
Collector-base cutoff current	I_{CBO}	-	-	10	nA	V_{CB} = 5V, I_E = 0A
Collector-emitter cutoff current [1]	I_{CEX}	-	-	20	µA	V_{CE} = 4.5V, I_B = 0.1µA
Emitter base cuttoff current	I_{EBO}	-	-	5	µA	V_{EB} = 1.5V, I_C = 0A
DC current gain	h_{FE}	50	90	150	-	I_C = 5mA, V_{CE} = 1V

Table 5 Dynamic characteristics

Parameter	Symbol	Values			Unit	Note / Test Condition
		Min.	Typ.	Max.		
Transition frequency	f_T	20	22	-	GHz	I_C= 10mA, V_{CE}= 3V, f= 2GHz
Collector-base capacitance	C_{CB}	-	0.05	0.9	pF	V_{CB}= 2V, V_{BE}= vbe= 0, f= 1MHz
Collector-emitter capacitance	C_{CE}	-	0.32	0.48	pF	V_{CE}= 2V, V_{BE}= vbe= 0, f= 1MHz
Emitter-base capacitance	C_{EB}	-	0.36	3	pF	V_{EB}=0.5V, V_{CB}= vcb= 0, f= 1MHz
Noise Figure	F	-	1.15	1.8	dB	I_C= 2mA, V_{CE}= 2V, f = 1.8GHz, $Z_S = Z_{Sopt}$
Insertion power gain	$\|S_{21e}\|^2$	14	18	-	dB	I_C= 5mA, V_{CE}= 2V, f = 1.8GHz, $Z_S = Z_L$ = 50Ω
Power Gain [2]	G_{ms}	-	23	-	dB	I_C= 5mA, V_{CE}= 2V, f = 1.8GHz, $Z_S = Z_{Sopt}$, $Z_L = Z_{Lopt}$
1dB Compression point	P_{-1dB}	-	5	-	dBm	I_C= 5mA, V_{CE}= 2V, f = 1.8GHz, $Z_S = Z_{Sopt}$, $Z_L = Z_{Lopt}$

[1] This test assures $V_{(BR)CE0}$ > 4.5V

[2] $G_{ms} = \left|\frac{S21}{S12}\right|$

4 Package outlines

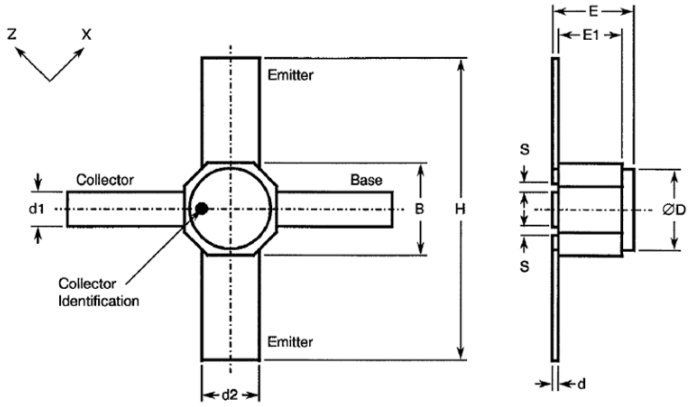

Symbols	Dimensions mm	
	Min	Max
B	1.68	1.88
d	0.07	0.15
d1	0.4	0.6
d2	0.92	1.12
ØD	1.55	1.85
E	0.85	1.25
E1	0.66	0.86
H	4	4.4
S	0.08	0.3

Trademarks
All referenced product or service names and trademarks are the property of their respective owners.

Edition 5, January 2022

Published by

Infineon Technologies AG

81726 München, Germany

Do you have a question about this document?

Email: erratum@infineon.com