Never stop thinking

TLE4906-3K

High Precision Hall-Effect Switch

Datasheet

Rev 1.0, 2010-12

Sensors

Edition 2010-12

Published by
Infineon Technologies AG
81726 Munich, Germany

© 2010 Infineon Technologies AG
All Rights Reserved.

Legal Disclaimer

The information given in this document shall in no event be regarded as a guarantee of conditions or characteristics. With respect to any examples or hints given herein, any typical values stated herein and/or any information regarding the application of the device, Infineon Technologies hereby disclaims any and all warranties and liabilities of any kind, including without limitation, warranties of non-infringement of intellectual property rights of any third party.

Information

For further information on technology, delivery terms and conditions and prices, please contact the nearest Infineon Technologies Office (**www.infineon.com**).

Warnings

Due to technical requirements, components may contain dangerous substances. For information on the types in question, please contact the nearest Infineon Technologies Office.

Infineon Technologies components may be used in life-support devices or systems only with the express written approval of Infineon Technologies, if a failure of such components can reasonably be expected to cause the failure of that life-support device or system or to affect the safety or effectiveness of that device or system. Life support devices or systems are intended to be implanted in the human body or to support and/or maintain and sustain and/or protect human life. If they fail, it is reasonable to assume that the health of the user or other persons may be endangered.

TLE4906-3K High Precision Hall Effect Switch

Revision History: 2010-12, Rev 1.0

Previous Version:

Page	Subjects (major changes since last revision)

We Listen to Your Comments

Any information within this document that you feel is wrong, unclear or missing at all?
Your feedback will help us to continuously improve the quality of this document.
Please send your proposal (including a reference to this document) to:

sensors@infineon.com

Table of Contents

1 Product Description 3
1.1 Overview 3
1.2 Features 3
1.3 Target Applications 3

2 Functional Description 4
2.1 General 4
2.2 Pin Configuration (top view) 4
2.3 Pin Description 4
2.4 Block Diagram 5
2.5 Functional Block Description 5
2.6 Application circuit 7

3 Specification 8
3.1 Absolute Maximum Ratings 8
3.2 Operating Range 9
3.3 Electrical and Magnetic Characteristics 10

4 Package Information 12
4.1 Package Outline 12
4.2 Distance between Chip and Package 13
4.3 Package Marking 13

1 Product Description

1.1 Overview

The TLE4906-3K is a high precision Hall effect switch with highly accurate switching thresholds for operating temperatures up to 150°C.

1.2 Features

- 2.7V to 24V supply voltage
- Operation from unregulated power supply
- High sensitivity and high stability of the magnetic switching points
- High resistance to mechanical stress by Active Error Compensation
- Reverse battery protection (-18V)
- Superior temperature stability
- Low jitter (typ. 1µs)
- High ESD performance (± 4kV HBM)
- Digital output signal
- SMD package SC59 (SOT23 compatible)

1.3 Target Applications

Target applications for TLE4906-3K are all automotive applications which require a high precision Hall switch for position sensing with a operating temperature range from -40°C to +150°C. The TLE4906-3K is a unipolar Hall switch which is actuated with the south pole of a magnet. A magnetic field above the threshold B_{OP} switches the output to low (output transistor ON) and a magnetic field below the release point B_{RP} back to high (transistor OFF).

Product Name	Product Type	Ordering Code	Package
TLE4906-3K	Unipolar Hall Switch	SP000868844	SC59

2 Functional Description

2.1 General

The TLE4906-3K is an integrated circuit Hall-effect sensor designed specifically for highly accurate applications.

Precise magnetic switching points and high temperature stability are achieved by active compensation circuits and chopper techniques on chip.

2.2 Pin Configuration (top view)

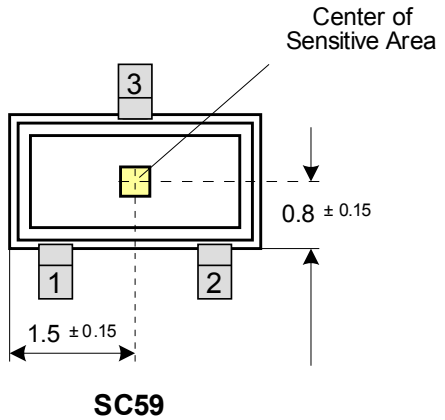

Figure 1 Pin Configuration and Center of Sensitive Area

2.3 Pin Description

Table 1 Pin Description SC59

Pin No.	Symbol	Function	Comment
1	V_{DD}	Supply voltage	
2	Q	Output	
3	GND	Ground	

2.4 Block Diagram

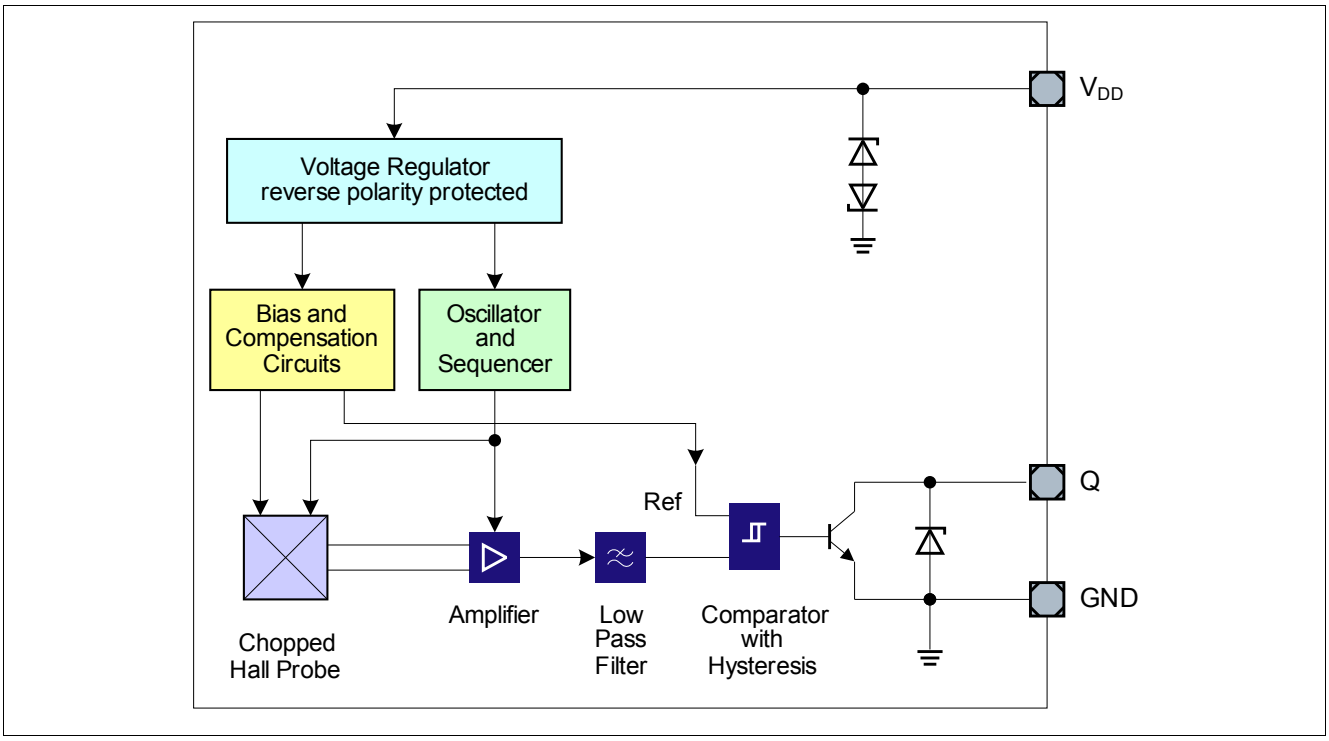

Figure 2 Functional Block Diagram

2.5 Functional Block Description

The chopped Hall IC Switch comprises a Hall probe, bias generator, compensation circuits, oscillator and output transistor.

The bias generator provides currents for the Hall probe and the active circuits. Compensation circuits stabilize the temperature behavior and reduce technology variations.

The Active Error Compensation rejects offsets in signal stages and the influence of mechanical stress to the Hall probe caused by molding and soldering processes and other thermal stresses in the package.

This chopper technique together with the threshold generator and the comparator ensure high accurate magnetic switching points.

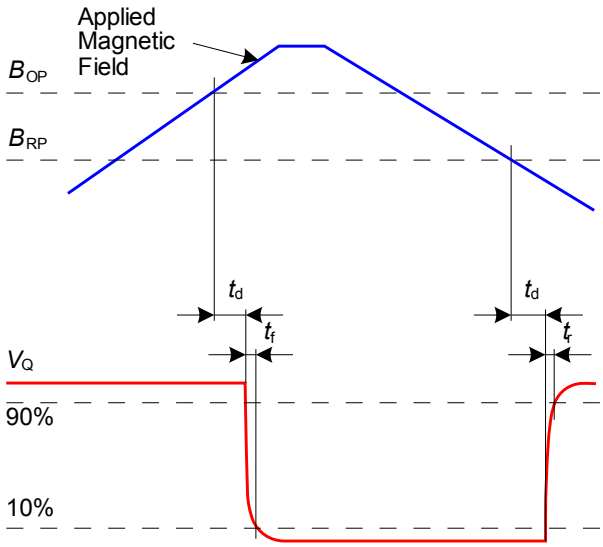

Figure 3 Timing Diagram

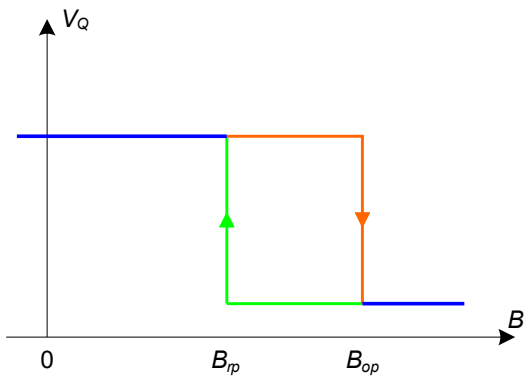

Figure 4 Output Signal

2.6 Application circuit

It is recommended to use a series resistor R_S with 200Ω and a capacitor of C_{DD} = 4.7nF for protection against overvoltage and transients on the supply line. A capacitor C_Q at the Q pin protects the IC from disturbances coupled to the output. A pull-up resistor R_Q is also required for the output pin Q.

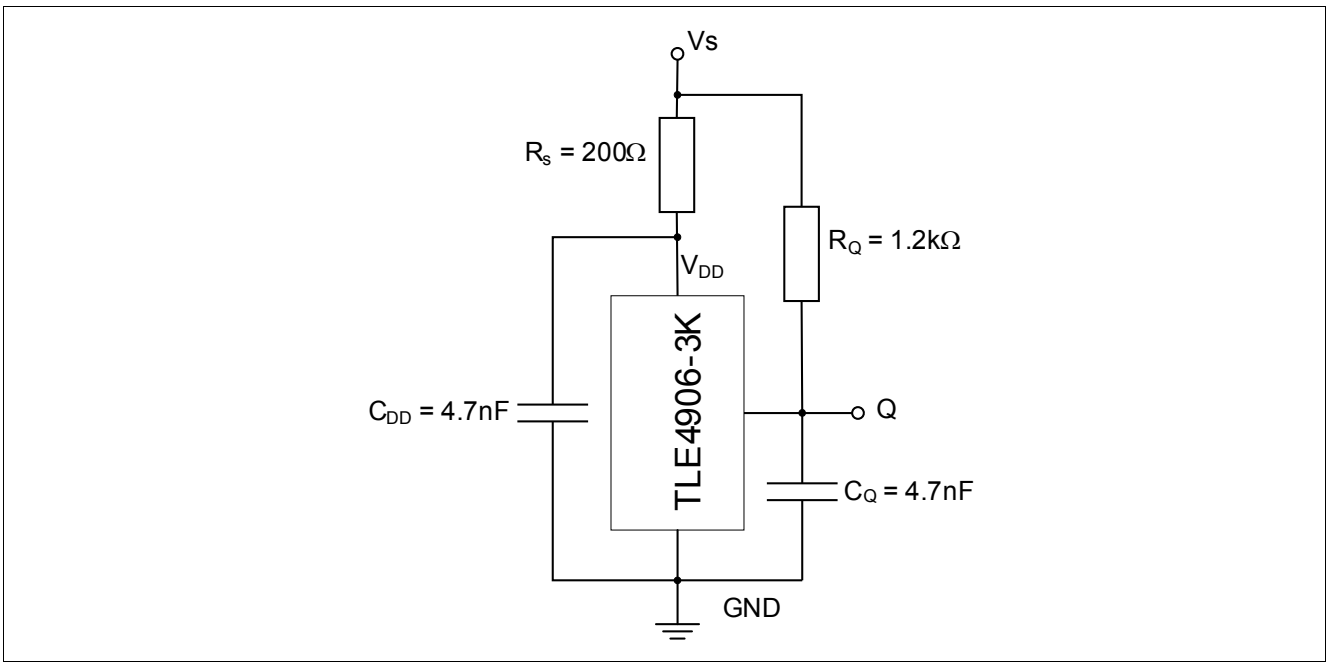

Figure 5 Application circuit

3 Specification

3.1 Absolute Maximum Ratings

Table 2 Absolute Maximum Rating Parameters
T_j = -40°C to 150°C

Parameter	Symbol	Limit Values		Unit	Note / Test Condition
		Min.	Max.		
Supply voltage	V_{DD} V_S V_S	-18 -18 -18	18 24 26	V	 for 1h, $R_S \geq 200\Omega$ for 5min, $R_S \geq 200\Omega$
Supply current through protection device	I_{DD}	-50	50	mA	
Output voltage	V_Q	-0.7 -0.7	18 26	V	 for 5min @ 1.2kΩ pull up
Continuous output current	I_Q	-50	50	mA	
Junction temperature	T_j	– – – –	155 165 175 195	°C	for 2000h (not additive) for 1000h (not additive) for 168h (not additive) for 3 x 1h (additive)
Storage temperature	T_S	-40	150	°C	
Magnetic flux density	B	–	unlimited	mT	

Note: Stresses above the max. values listed here may cause permanent damage to the device. Exposure to absolute maximum rating conditions for extended periods may affect device reliability. Maximum ratings are absolute ratings; exceeding only one of these values may cause irreversible damage to the integrated circuit.

Table 3 ESD Protection[1)]

Parameter	Symbol	Limit Values		Unit	Note / Test Condition
		Min.	Max.		
ESD Voltage	V_{ESD}		±4	kV	HBM, R = 1.5kΩ, C = 100pF T_A = 25°C

1) Human Body Model (HBM) tests according to: EOS/ESD Association Standard S5.1-1993 and Mil. Std. 883D method 3015.7

3.2 Operating Range

The following operating conditions must not be exceeded in order to ensure correct operation of the TLE4906-3K . All parameters specified in the following sections refer to these operating conditions unless otherwise mentioned.

Table 4 Operating Conditions Parameters

Parameter	Symbol	Values			Unit	Note / Test Condition
		Min.	Typ.	Max.		
Supply voltage	V_{DD}	2.7		18	V	
Output voltage	V_Q	-0.7		18	V	
Junction temperature	T_j	-40		150	°C	
Output current	I_Q	0		20	mA	

3.3 Electrical and Magnetic Characteristics

Product characteristics involve the spread of values guaranteed within the specified voltage and ambient temperature range. Typical characteristics are the median of the production.

Table 5 General Electrical Characteristics[1)]

Parameter	Symbol	Values			Unit	Note / Test Condition
		Min.	Typ.	Max.		
Supply current	I_{DD}	2	4	6	mA	V_{DD} = 2.7V ... 18V
Reverse current	I_{SR}	0	0.2	1	mA	V_{DD} = -18V
Output saturation voltage	V_{QSAT}	-	0.3	0.6	V	I_Q = 20mA
Output leakage current	I_{QLEAK}	-	0.05	10	µA	for V_Q = 18V
Output fall time	t_f	-	0.02	1	µs	R_Q = 1.2kΩ; C_Q = 50pF see **Figure 3**
Output rise time	t_r	-	0.4	1	µs	
Chopper frequency	f_{OSC}	-	320	-	kHz	
Switching frequency	f_{SW}	0	-	15[2)]	kHz	
Delay time[3)]	t_d	-	13	-	µs	
Output jitter[4)]	t_{QJ}	-	1	-	$µs_{RMS}$	typical value for square wave signal with 1kHz
Power-on time[5)]	t_{PON}	-	13	-	µs	$V_{DD} \geq$ 2.7V
Thermal resistance[6)]	R_{thJA}	-	100	-	K/W	SC59

1) over operating range, unless otherwise specified. Typical values correspond to V_{DD} = 12V and T_A = 25°C
2) To operate the sensor at the max. switching frequency, the value of the magnetic signal amplitude must be 1.4 times higher than for static fields. This is due to the -3dB corner frequency of the low pass filter in the signal path.
3) Systematic delay between magnetic threshold reached and output switching.
4) Jitter is the unpredictable deviation of the output switching delay.
5) Time from applying $V_{DD} \geq$ 2.7V to the sensor until the output state is valid.
6) Thermal resistance from junction to ambient.

Calculation of the ambient temperature:

e.g. for V_{DD} = 12.0V, I_{DDtyp} = 4mA, $V_{QSATtyp}$ = 0.3V and I_Q = 20mA

Power dissipation P_{DIS} = 54.0mW

In $T_A = T_j - (R_{thJA} \times P_{DIS})$ = 175°C - (100K/W x 0.054W)

Resulting max. ambient temperature: T_A = 169.6°C

Table 6 Magnetic Characteristics[1)]

Parameter	Symbol	T_j[°C]	Values			Unit	Note / Test Condition
			Min.	Typ.	Max.		
Operating point	B_{OP}	-40 25 150	21.6 20.0 16.8	30.2 28.0 23.8	38.8 36.0 30.8	mT	
Release point	B_{RP}	-40 25 150	17.1 15.9 13.3	24.2 22.5 19.1	31.2 29.1 24.9	mT	
Hysteresis	B_{HYS}	-40 25 150	4.4 4.1 3.5	6.0 5.5 4.7	7.4 6.9 5.9	mT	
Temperature compensation of magnetic thresholds	T_C		-	-1200	-	ppm/°C	
Repeatability of magnetic thresholds[2)]	B_{REP}		-	20	-	μT_{RMS}	typ. value for $\Delta B/\Delta t$ > 12mT/ms

1) over operating range, unless otherwise specified. Typical values correspond to V_{DD} = 12V and T_A = 25°C.

2) B_{REP} is equivalent to the noise constant

Note: Typical characteristics specify mean values expected over the production spread

Field Direction Definition

Positive magnetic fields are defined with the south pole of the magnet to the branded side of package.

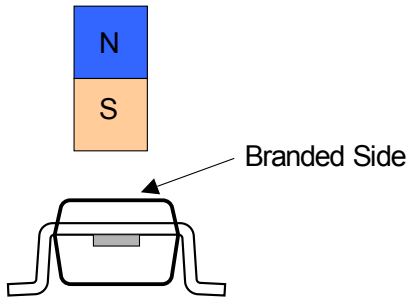

Figure 6 Definition of magnetic field direction

4 Package Information

4.1 Package Outline

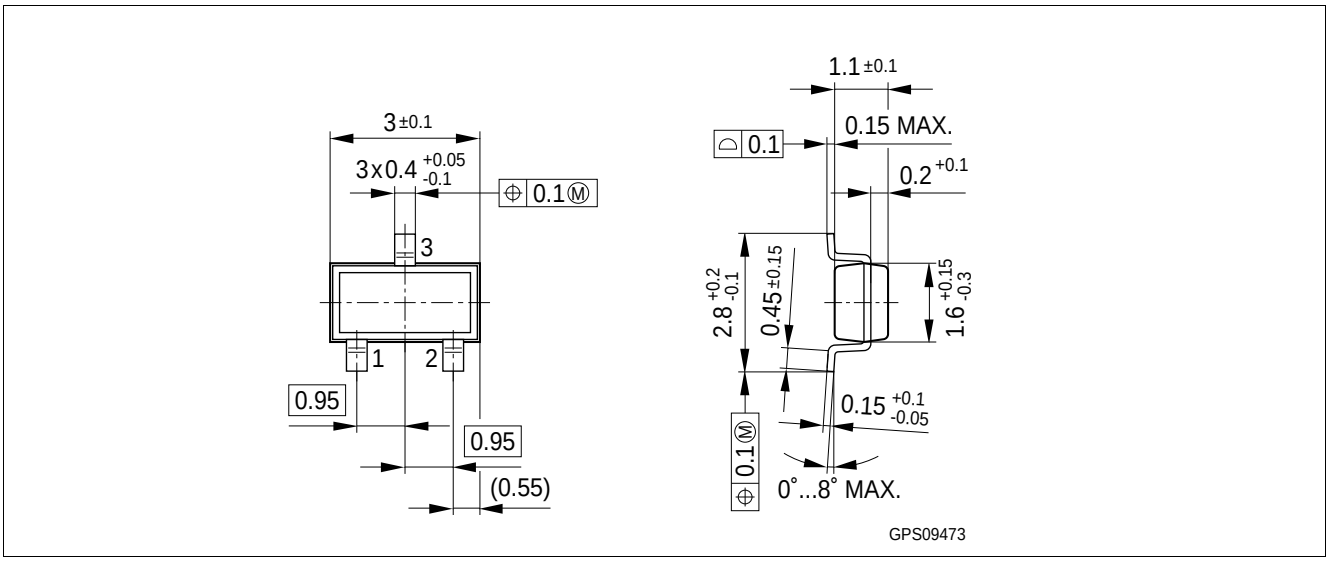

Figure 7 **SC59 Package Outline** (all dimensions in mm)

The following picture shows a recommendation for the PCB layout.

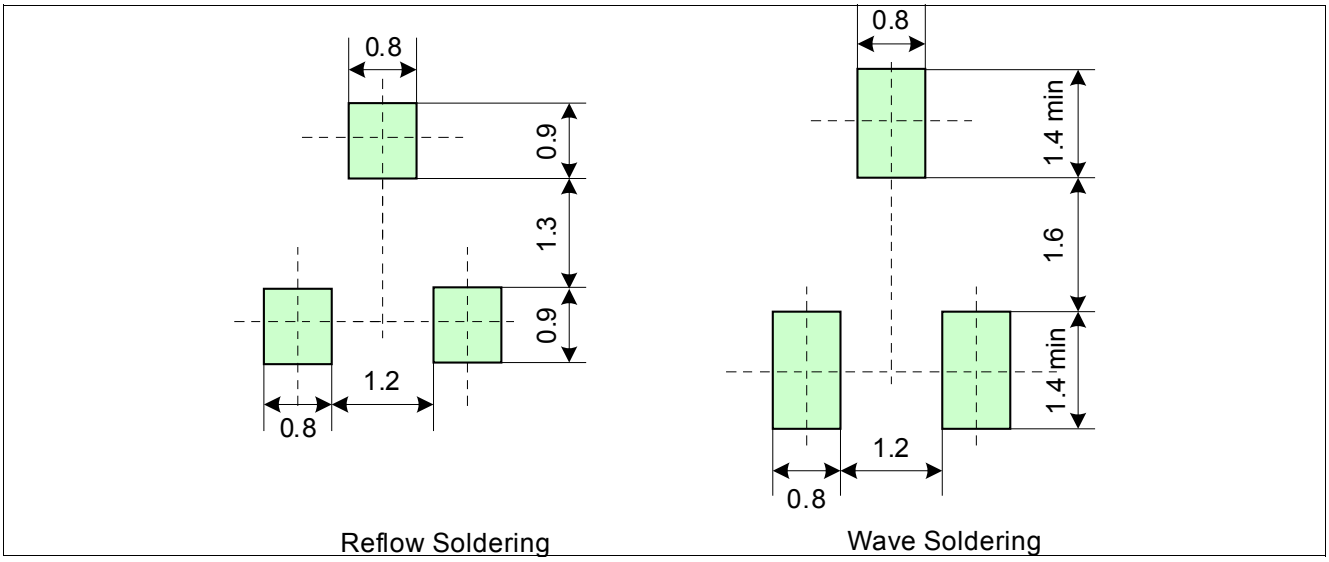

Figure 8 **SC59 Footprint** (SOT23 compatible, all dimensions in mm)

4.2 Distance between Chip and Package

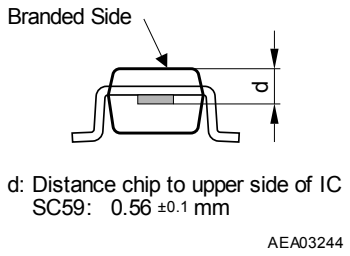

Figure 9 Distance between chip and package SC59

4.3 Package Marking

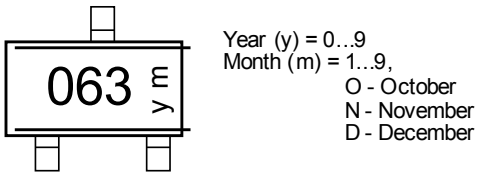

Figure 10 Marking of TLE4906-3K

www.infineon.com

Published by Infineon Technologies AG