Pushing Power Density Limits using SiC-JFet-based Matrix Converter

Martin Schulz, Infineon Tecnologies, Germany, martin.schulz@infineon.com
Liliana de Lillo, University of Nottingham, United Kingdom, liliana.de_lillo@nottingham.co.uk
Lee Empringham, University of Nottingham, United Kingdom, lee.empringham@nottingham.co.uk
Pat Wheeler, University of Nottingham, United Kingdom, pat.wheeler@nottingham.ac.uk

Abstract

The omnipresent trend of increasing the power density of inverter technology lead to new developments in semiconductor material. As most of the benefits come from higher operating junction temperatures, it is mandatory to restrict the inverter design to peripheral components capable to work in these high temperature conditions. Eliminating the needs for large DC-link capacitors, the matrix converter poses a viable alternative. The present paper describes a SiC JFET based Matrix Converter achieving a power density of 20kW/dm^3 with forced air cooling only. The prototype built is described in detail emphasizing the new technologies used and measured data gathered from the demonstrator is presented.

1 Introduction

The matrix converter [1] can be viewed as a direct converter without the need for intermediate storage components as in a typical rectifier-DC link-Inverter topology. A matrix converter consists of a matrix of bidirectional switches arranged in such a way as to enable any output phase to be connected to any input phase at any point in time. The gating of the switches is modulated to develop the desired output voltage across the load and the desired input current from the supply. A small input filter is implemented to filter out the high frequency switching components. Advantages of this topology include sinusoidal input currents with controllable power factor, inherent bidirectional power flow and lack of bulky energy storage components.

2 Power Circuit

To build a full matrix converter for a three phase input, three phase output system, a grid of 3x3 bidirectional switches is necessary. Each bidirectional switch consists of two anti-series connected semiconductor switches build from SiC JFET. To achieve current carrying and voltage blocking capabilities in both directions, anti-parallel diodes are mandatory. The resulting configuration used for the present work is displayed in figure 1.

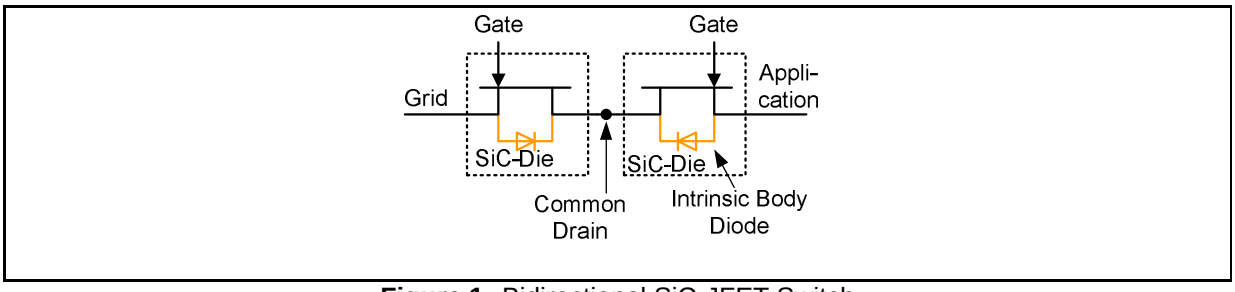

Figure 1: Bidirectional SiC-JFET Switch

It can be seen from the picture that the diode is an intrinsic part of the SiC-Die so it is not necessary to provide it as an additional die as it was with common Si-IGBT technology previously used [2].

Hence, the space inside a power electronic module can be used more efficiently adding to the target set for the power density criteria. To achieve the current carrying capability wanted in this project, the paralleling of two dies per device within each switch became mandatory and so using a total of four SiC-Dies for one bidirectional switch. It also became obvious that building the converter based on discrete parts was not an option, therefore a prototype module was needed to carry all of the chips of the converter to achieve a compact, thermally efficient setup.
During first experiments with the new chip generation [3] it was learned, that with the JFET also the stray inductance of the control circuit has an influence on the die's switching behavior. Adding 36 dies to one package and achieving the smallest possible stray inductance for the control path while at the same time keeping the power line stray inductance at minimum levels became a challenge during the design of the prototype module.

In single die tests, using small DCB carriers was an option that on the other hand did not offer enough space for the whole inverter setup. However, module types large enough to carry all dies did not provide the contact technology needed to achieve low stray inductances. It was decided to combine the beneficial aspects of three module systems to form the prototype:

- Use a low-power EconoPACK^{TM}3 housing to get the necessary space and a base plate to improve thermal management
- Use the DCB developed for the newly designed 600A EconoDUAL^{TM}3 to get as much space inside as possible for the given frame[4]
- Use a pin-rivet connection close to the dies as known from low-power Easy-type modules

The pin-rivet connection usually is not used in Econo-Type modules, prototyping was done manually. To achieve the lowest possible stray inductance in the control path, the rivets were positioned as close to the dies as possible, the resulting layout for one bidirectional switch can be seen in the magnified detail shown in Figure 2: To keep the most compact design, external current sensing was not an option in this

Figure 2: Four dies forming one bidirectional switch and Matrix Converter Module

project. Instead, internal shunts were chosen and integrated into the power module so that the output line current can be measured. Additionally, a NTC temperature sensor is integrated as well to capture the base plate temperature. The power electronic module build is depicted in figure 2. The complete switching matrix including the current and temperature sensors was implemented in one; a scheme of what is included into the power module is shown in Figure 3.

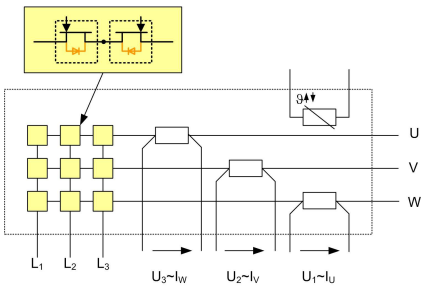

Figure 3: Switching Matrix, Shunts and NTC being build into the power electronic module

It is well known that matrix converters need a clamp circuit consisting of a high speed diode bridge connected to each input and output phase of the matrix converter to protect the devices from open circuit of the load and to prevent ringing of the input filter when the utility supply is turned on. Due to the lack of energy storage facility in a matrix converter, the main purpose of the clamp circuit is to protect the matrix converter from potential failure in the current commutation process. Figure 4 represents a typical clamp circuit layout.

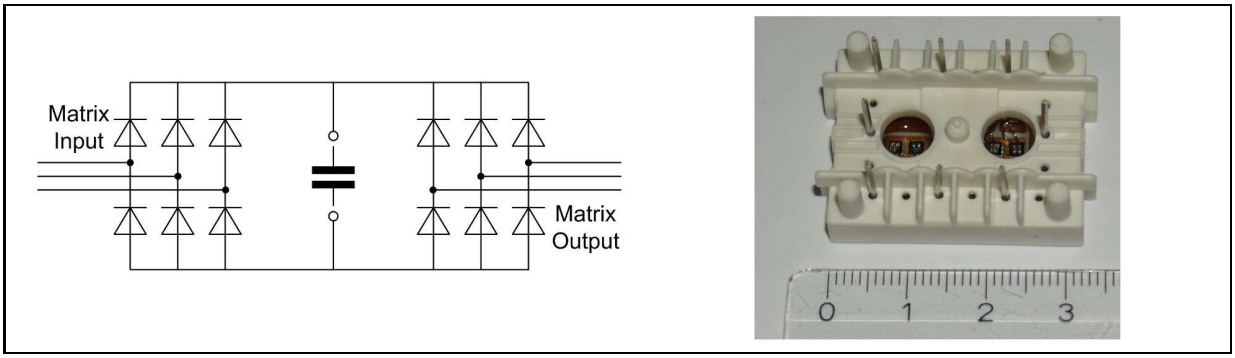

Figure 4: Schematic of the clamping rectifier setup and the low-power module build for the prototype

In order to achieve both a low inductive design and to use high speed diodes, 1200V SiC-Schottky-diodes were chosen to build the rectifier circuits and an available low-power module was used to carry the dies, Figure 4 shows a photo of the module built.

Due to the very low amount of energy carried by the rectifiers, cooling the clamp circuit module by mounting it to a heat sink is unnecessary.

3 Thermal management

Considering losses per current as a fixed, yet limited ratio, increasing power density levels leads to higher loss-density as well. Implementing SiC-Dies enables higher power densities as a consequence of semiconductor materials being able to withstand higher temperature levels. As this results in higher temperature levels for the complete design, the thermal management has to be considered carefully as well. In the prototype designed, a special heat sink was manufactured to support a most compact design. Forced air cooling was demanded to avoid large external chillers, tubes and pumps that would unnecessarily increase the needed space.
To save space without sacrificing thermal performance, a copper heat sink was developed and manufactured to exactly fit to the footprint of the power module. It features two small fans that flush with the heat sink's fins to prevent additional volume loss. It is depicted in Figure 5.

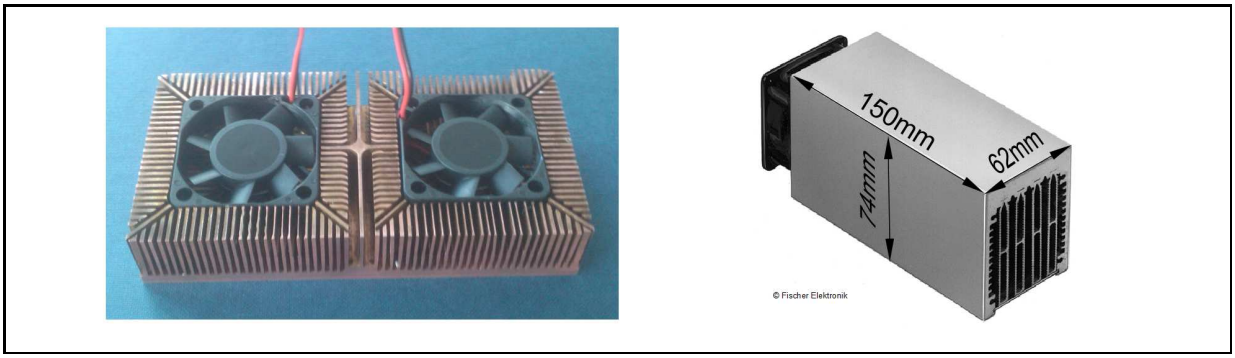

Figure 5: Custom-made copper heat sink with extraordinary thermal properties compared to a commonly available high-performance heat sink

Despite the fact that the height of the copper-device is only about $20mm$ it shows a remarkable thermal performance. The thermal resistance was measured to be $R_{thHA} = 0.2 \text{ to } 0.3K/W$.

A widely used heat sink for an Econo-Type module in comparison has a hight-to-width ratio of about 1.2 leading to an area of $74 \times 62mm^2$. At a module length of $122mm$ this would result in a volume of $560cm^3$. A commonly available profile as for comparison displayed in Figure 5 with a length of 150mm features a thermal resistance to ambient of $R_{thHA} = 0.1 \text{ to } 0.25K/W$. Including the fan mounted to its face side, the surrounding cube for this off-the-shelf component has a volume of roughly $800cm^3$.
Compared to the standard component, the copper heat sink achieved a volume reduction of the cooling system from $800cm^3$ down to $150cm^3$ representing a volume saving of more than 80%.

4 Gate Driver Design Testing

A preliminary study has been conducted on the gate driver circuit design for the proposed SiC JFET matrix converter. The gate driver circuit has been implemented mainly using high temperature Infineon parts. The isolated gate driver power supplies were implemented using a single CoolMOS ICE2A365 to develop a current-mode flyback configuration in discontinuous conduction mode as described in [6]. Early samples of the newly developed 2ED020I12-FA dual channel integrated gate drive chip which is designed to drive IGBTs was used to drive the SiC JFETs. It is based on the hardware used in the 1ED020I12-F [5] but features two separate secondary cores with a common logic side.

Like in the 1ED020I12-F, logic and high-voltage parts are isolated using the coreless transformer setup. Figure 6 shows the circuit used to experimentally test the SiC JFET switching capabilities. One device of an equivalent bidirectional switch was driven with the test gate drive circuit mentioned earlier.

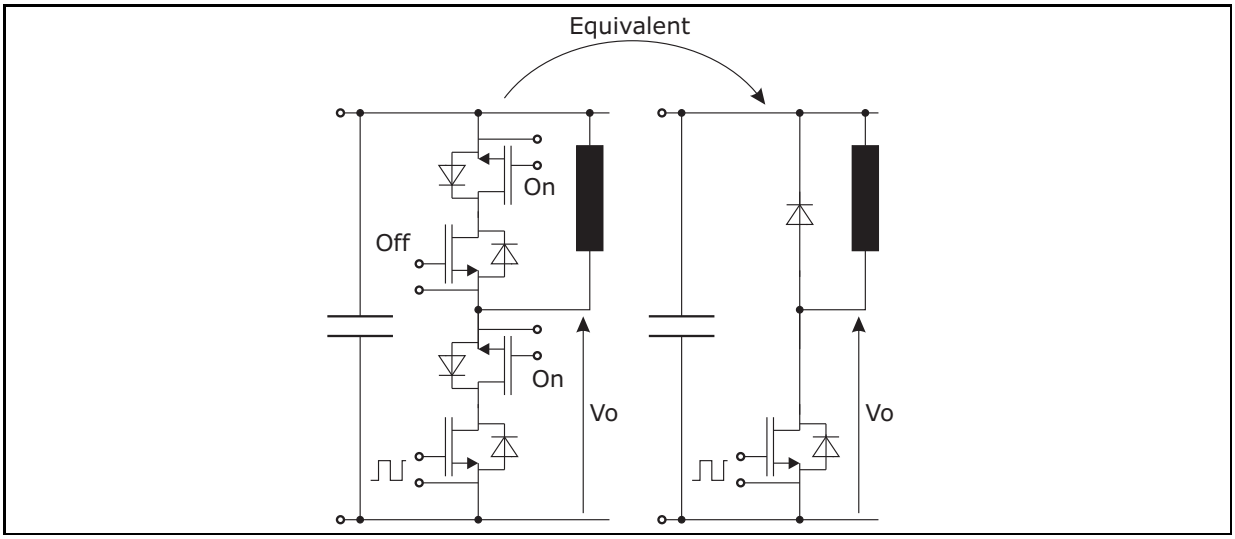

Figure 6: Test circuit arrangement together with its equivalent circuit

JFETs are normally ON devices and two bidirectional switches in one output phase are considered for the test circuit. By keeping a device of the above bidirectional switch OFF, the equivalent circuit would be a diode. If a JFET is turned ON, it can be considered as a short circuit. Figure 6 shows which devices are driven ON or OFF to form its equivalent circuit. Only one device in the bidirectional switch is driven with a 50 kHz, logic signal. An inductor of 50μH, used as the output load, and a capacitor of 100μF, used as DC-link input have been employed to complete the test circuit.

Results of the gate drive and JFET switching using a 30V DC input and a load current of 26A are presented in Figure 7 where the turn ON and turn OFF of the switching devices are shown. Each part of the figure shows the input logic demand signal, the gate drive waveform and the resulting output voltage of the circuit.

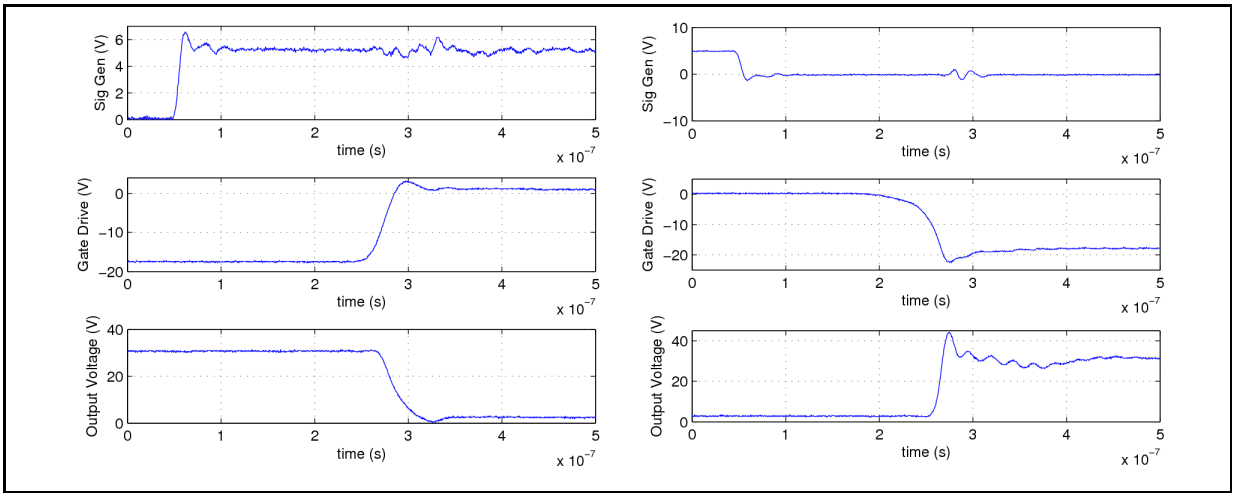

Figure 7: Gate driver and JFET performance at turn on, seen to the left and turn off displayed to the right

The gate drive power required is considerably less than the power required for an equivalent IGBT based design. A typical 40A IGBT has about 300nC gate charge, whereas the SiC JFET dies used in the prototype have a gate charge of typically 67nC. As two dies are connected in parallel, 140nC of gate charge can be assumed, thus a reduction of 50% of gate-drive output power is achieved. Besides reduced losses in the corresponding driver circuitry this also contributes to minimized power consumption of the converter's control part.

5 Input Filter

Operating the drive at a switching frequency as high as $f_S = 50kHz$ leads to a massive reduction of the input filter's volume. In this implementation, the input filter consists of three series inductors together with line-to line capacitors at the input to the converter power circuit. Simulation results depicted in Figure 8 hint out, that in conjunction with the high switching frequency, excellet conditions for the mains can be generated.

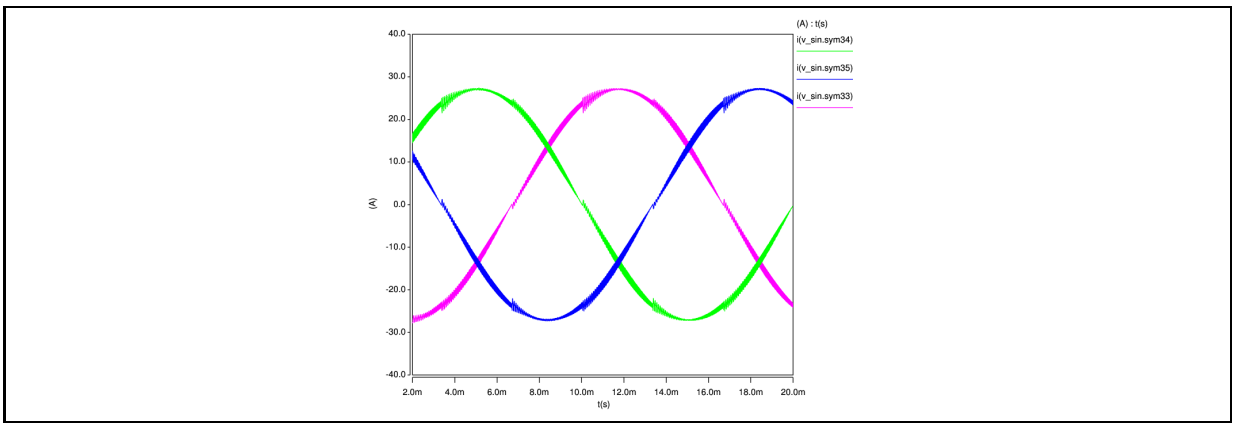

Figure 8: Simulated input current waveforms using $1\mu F, 50\mu H$ filter components with 20kW output power

To aid the commutation process, it is important that the capacitors are as close to the power module as possible and that stray inductances are minimized. The first PCB that is attached to the power module forms part of the input filter and consists of high temperature, surface mounted ceramic capacitors and a PCB arranged to form low inductance power planes. Some of the capacitors required for the filter are mounted on the underside of the power plane PCB in the gap created by the modules lid. This is done to reduce the volume required, the remaining input filter capacitors are mounted on another board which also contains the clamp circuit. The total line to line capacitance used for the prototype is $1\mu F$ together with $50\mu H$ inductors.

6 The prototype built

To demonstrate, what benefits can be expected from new technologies, the project scope was set beyond what is commonly available today. Comparing various inverter designs in a power range of up to 22kW found in the market today, the highest system power densities reach up to almost $2kW/dm^3$. Higher numbers usually are a consequence of neglecting the volume for chillers in liquid cooled designs. The power density achieved in the present converter partially is a consequence of utilizing the SiC's high operating junction temperature. This in turn can only be done because the matrix converter eliminates the need for the DC-Link capacitor as the most temperature sensitive device. A step to reduce filter component size is an increased switching frequency. Here too, SiC allows a massive step forward, the demonstrator is operated at 50kHz in hard switching conditions. A rendered 3D image of the prototype design is shown in Figure 9.

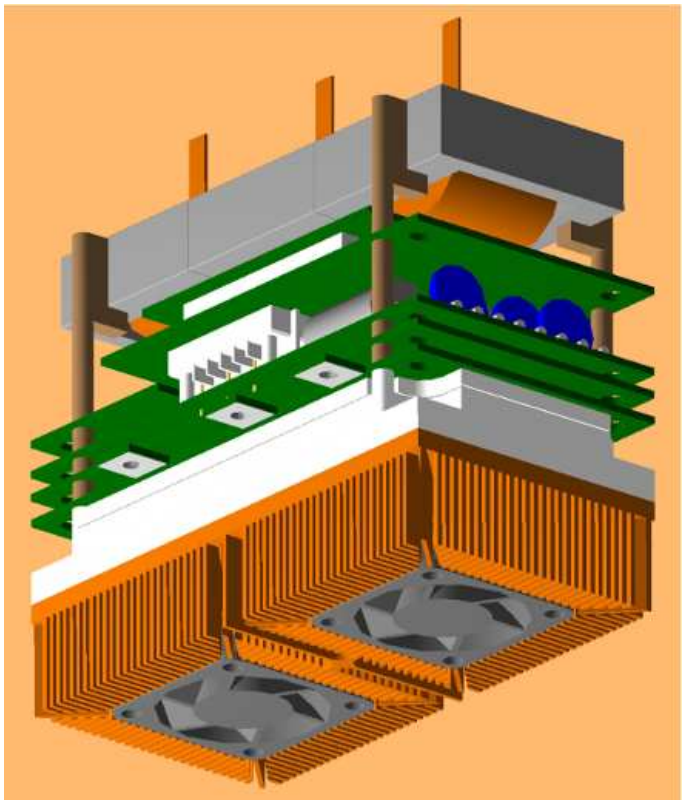

Figure 9: Rendered image of the whole converter

Being build from 1200V devices the converter can operate at 400V input and provide an output current of up to 40A. One additional benefit arising from the matrix topology is the inherent ability to regenerate energy from the application to the grid.
Correct current commutation in matrix converters is crucial to the reliable operation of the circuit since there are no natural freewheeling paths.

There are many ways of achieving this but the SiC prototype will use the 4 step current direction based strategy. Initially, both forward and reverse devices in a bidirectional switch are gated to allow the current direction to reverse. At the point of commutation, the non-conducting device is turned off. The device that will conduct the current in the incoming bidirectional switch is gated and the device that was conducting is turned off, finally the reverse device in the incoming switch is gated to enable current reversal. During the steady state periods where both forward and reverse devices are gated, the load current will flow through both of the JFET structures, avoiding the use of the body diodes. This is not the case in the IGBT - diode structure where the load current always flows through the inverse diode. This is a significant advantage for the SiC implementation and helps to further reduce the losses of the circuit.

7 Conclusion

This paper describes the design and construction of a high power density converter for electrical drive applications. Eliminating the bulky, thermally sensitive DC-components is one step leading to the matrix converter topology. The implementation based on SiC-devices leads to lower losses and as a consequence of higher operating junction temperatures also to higher power density levels. Increasing the switching frequency to $50kHz$, possible due to the SiC technology, is mandatory to reduce the phyical size of the input-filter components. Using advanced copper heat sinks dramatically reduces the overall volume of the cooling system, thus contributing to the small volume achieved with the prototype. This holistic approach is necessary to push power density levels in forced air cooled systems to the 20kW/dm^3 desired for the project.

References

[1] P.W. Wheeler, J. Rodriguez, J.C. Clare, L. Empringham, A. Weinstein
Matrix converters: a technology review
IEEE Transactions on Industrial Electronics, Volume: 49 , Issue: 2, 2002, Page(s): 276 - 288

[2] Infineon Technologies,
Datasheet of FM35R12KE3,
Infineon Technologies, 2001-08-16

[3] Daniel Domes, Xi Zhang
CASCODE LIGHT - normally-on JFET stand alone performance in a normally-off Cascode circuit,
PCIM, Nuremberg, May 2010

[4] R. Ott, M. Bäßler, R. Tschirbs, D. Siepe
New superior assembly technologies for modules with highest power densities,
PCIM, Nuremberg, May 2010

[5] Infineon Technologies,
Datasheet of the 1ED020I12-FA,
Infineon Technologies, 2009-12-15

[6] Infineon Technologies,
Ultra Wide Input Range, HV-BIAS Supply for SMPS,
Infineon Technologies, 2009-03-18