Diode

Rapid Switching Emitter Controlled Diode

IDW60C65D1

Emitter Controlled Diode Rapid 1 Common Cathode Series

Data sheet

Industrial Power Control

Rapid Switching Emitter Controlled Diode

Features:

- Qualified according to JEDEC for target applications
- 650V Emitter Controlled technology
- Temperature stable behaviour of key parameters
- Low forward voltage (V_F)
- Ultra fast recovery
- Low reverse recovery charge (Q_{rr})
- Low reverse recovery current (I_{rrm})
- 175°C junction operating temperature
- Pb-free lead plating
- RoHS compliant

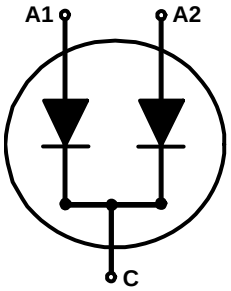

Applications:

- AC/DC converters
- Boost diode in PFC stages
- Free wheeling diodes in inverters and motor drives
- General purpose inverters
- Switch mode power supplies

Package pin definition:

- Pin 1 - anode (A1)
- Pin 2 and backside - cathode (C)
- Pin 3 - anode (A2)

Key Performance and Package Parameters

Type	V_{rrm}	I_f	V_f, T_{vj}=25°C	T_{vjmax}	Marking	Package
IDW60C65D1	650V	2x 30A	1.35V	175°C	C60ED1	PG-TO247-3

Table of Contents

Description 2
Table of Contents 3
Maximum Ratings (per leg) 4
Thermal Resistances (per leg) 4
Electrical Characteristics 4
Electrical Characteristics Diagrams 6
Package Drawing 9
Testing Conditions 10
Revision History 11
Disclaimer 11

Maximum Ratings (per leg)

For optimum lifetime and reliability, Infineon recommends operating conditions that do not exceed 80% of the maximum ratings stated in this datasheet.

Parameter	Symbol	Value	Unit
Repetitive peak reverse voltage, $T_{vj} \geq 25°C$	V_{RRM}	650	V
Diode forward current, limited by T_{vjmax} $T_C = 25°C$ $T_C = 100°C$	I_F	60.0 30.0	A
Diode pulsed current, t_p limited by T_{vjmax}	I_{Fpuls}	90.0	A
Diode surge non repetitive forward current $T_C = 25°C$, $t_p = 10.0ms$, sine halfwave	I_{FSM}	240.0	A
Power dissipation $T_C = 25°C$ Power dissipation $T_C = 100°C$	P_{tot}	142.0 71.0	W
Operating junction temperature	T_{vj}	-40...+175	°C
Storage temperature	T_{stg}	-55...+150	°C
Soldering temperature, wave soldering 1.6mm (0.063in.) from case for 10s		260	°C
Mounting torque, M3 screw Maximum of mounting processes: 3	M	0.6	Nm

Thermal Resistances (per leg)

Parameter	Symbol	Conditions	Max. Value	Unit
Characteristic				
Diode thermal resistance,[1)] junction - case	$R_{th(j-c)}$		1.06	K/W
Thermal resistance junction - ambient	$R_{th(j-a)}$		40	K/W

Electrical Characteristics (per leg), at T_{vj} = 25°C, unless otherwise specified

Parameter	Symbol	Conditions	Value			Unit
			min.	typ.	max.	
Static Characteristic						
Diode forward voltage	V_F	$I_F = 30.0A$ $T_{vj} = 25°C$ $T_{vj} = 125°C$ $T_{vj} = 175°C$	- - -	1.35 1.32 1.28	1.70 - -	V
Reverse leakage current[2)]	I_R	$V_R = 650V$ $T_{vj} = 25°C$ $T_{vj} = 175°C$	- -	- 1200.0	40.0 -	µA

Electrical Characteristic, at T_{vj} = 25°C, unless otherwise specified

Parameter	Symbol	Conditions	Value			Unit
			min.	typ.	max.	
Dynamic Characteristic						
Internal emitter inductance measured 5mm (0.197 in.) from case	L_E		-	13.0	-	nH

[1)] Please be aware that in nonstandard load conditions, due to high $R_{th(j-c)}$, T_{vj} close to T_{vjmax} can be reached.
[2)] Reverse leakage current per leg specified for operating conditions with zero voltage applied to the other leg.

Switching Characteristics (per leg), Inductive Load

Parameter	Symbol	Conditions	Value			Unit
			min.	typ.	max.	
Diode Characteristic, at T_{vj} = 25°C						
Diode reverse recovery time	t_{rr}	T_{vj} = 25°C, V_R = 400V, I_F = 30.0A, di_F/dt = 1000A/µs, $L\sigma$ = 30nH, $C\sigma$ = 40pF, switch IGW50N65H5.	-	66	-	ns
Diode reverse recovery charge	Q_{rr}		-	0.73	-	µC
Diode peak reverse recovery current	I_{rrm}		-	16.8	-	A
Diode peak rate of fall of reverse recovery current during t_b	di_{rr}/dt		-	-1370	-	A/µs
Diode reverse recovery time	t_{rr}	T_{vj} = 25°C, V_R = 400V, I_F = 30.0A, di_F/dt = 200A/µs, $L\sigma$ = 30nH, $C\sigma$ = 40pF, switch IGW50N65H5.	-	115	-	ns
Diode reverse recovery charge	Q_{rr}		-	0.45	-	µC
Diode peak reverse recovery current	I_{rrm}		-	5.4	-	A
Diode peak rate of fall of reverse recovery current during t_b	di_{rr}/dt		-	-660	-	A/µs

Switching Characteristics (per leg), Inductive Load

Parameter	Symbol	Conditions	Value			Unit
			min.	typ.	max.	
Diode Characteristic, at T_{vj} = 175°C/125°C						
Diode reverse recovery time	t_{rr}	T_{vj} = 175°C, V_R = 400V, I_F = 30.0A, di_F/dt = 1000A/µs, $L\sigma$ = 30nH, $C\sigma$ = 40pF, switch IGW50N65H5.	-	105	-	ns
Diode reverse recovery charge	Q_{rr}		-	1.83	-	µC
Diode peak reverse recovery current	I_{rrm}		-	25.6	-	A
Diode peak rate of fall of reverse recovery current during t_b	di_{rr}/dt		-	-1000	-	A/µs
Diode reverse recovery time	t_{rr}	T_{vj} = 125°C, V_R = 400V, I_F = 30.0A, di_F/dt = 200A/µs, $L\sigma$ = 30nH, $C\sigma$ = 40pF, switch IGW50N65H5.	-	154	-	ns
Diode reverse recovery charge	Q_{rr}		-	0.98	-	µC
Diode peak reverse recovery current	I_{rrm}		-	9.8	-	A
Diode peak rate of fall of reverse recovery current during t_b	di_{rr}/dt		-	-490	-	A/µs

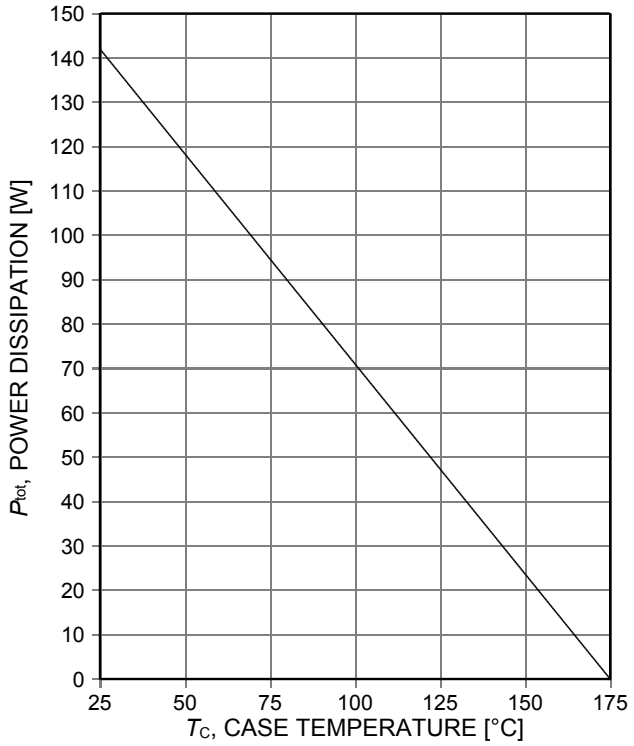

Figure 1. **Power dissipation per leg as a function of case temperature**
(T_{vj}≤175°C)

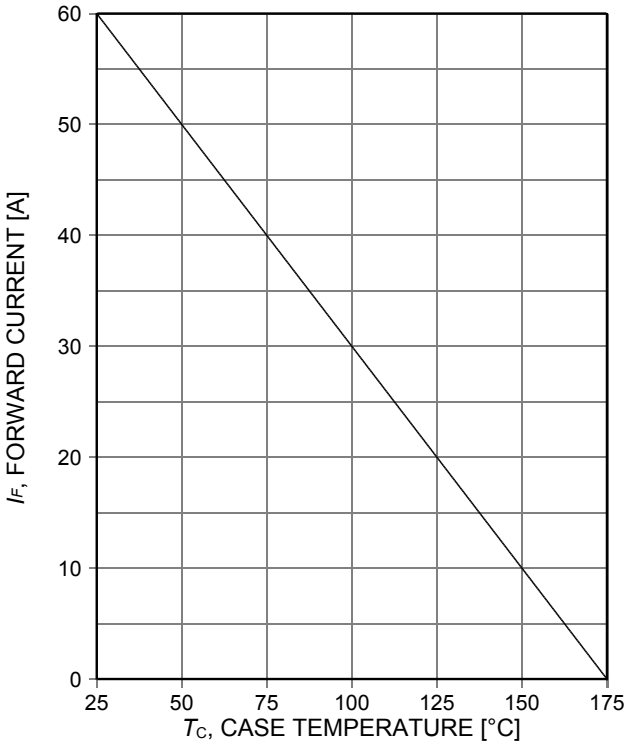

Figure 2. **Diode forward current per leg as a function of case temperature**
(T_{vj}≤175°C)

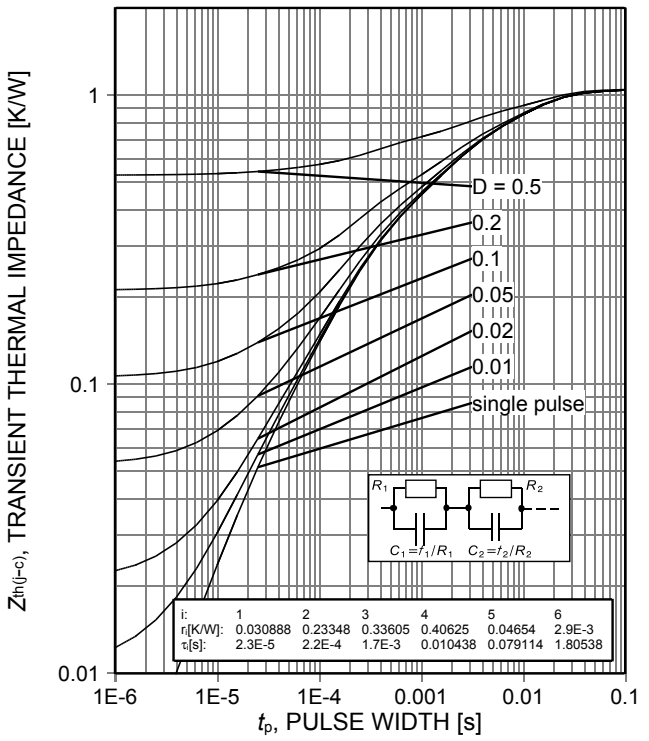

Figure 3. **Diode transient thermal impedance per leg as a function of pulse width**
(D=t_p/T)

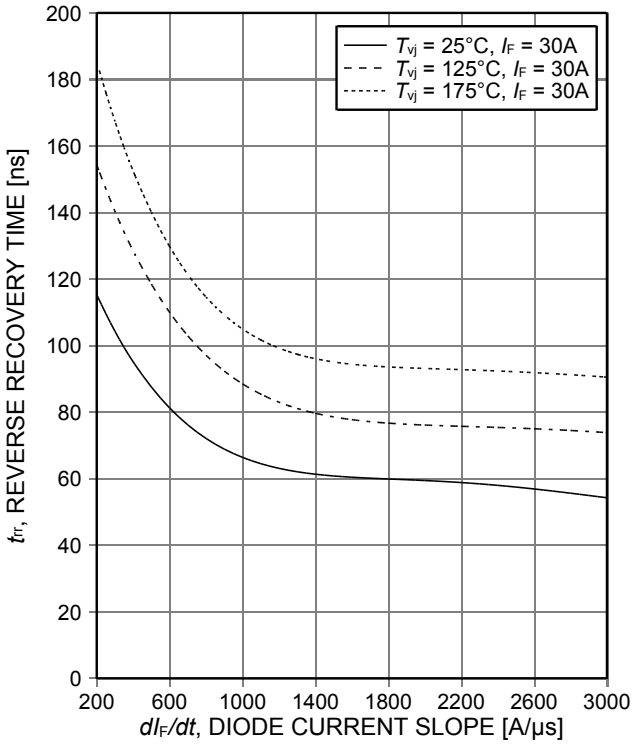

Figure 4. **Typical reverse recovery time per leg as a function of diode current slope**
(V_R=400V)

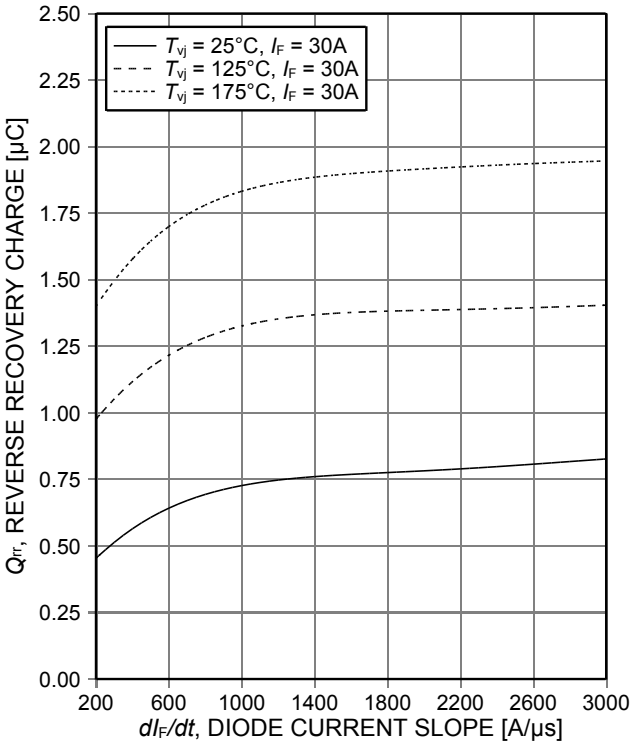

Figure 5. **Typical reverse recovery charge per leg as a function of diode current slope**
(V_R=400V)

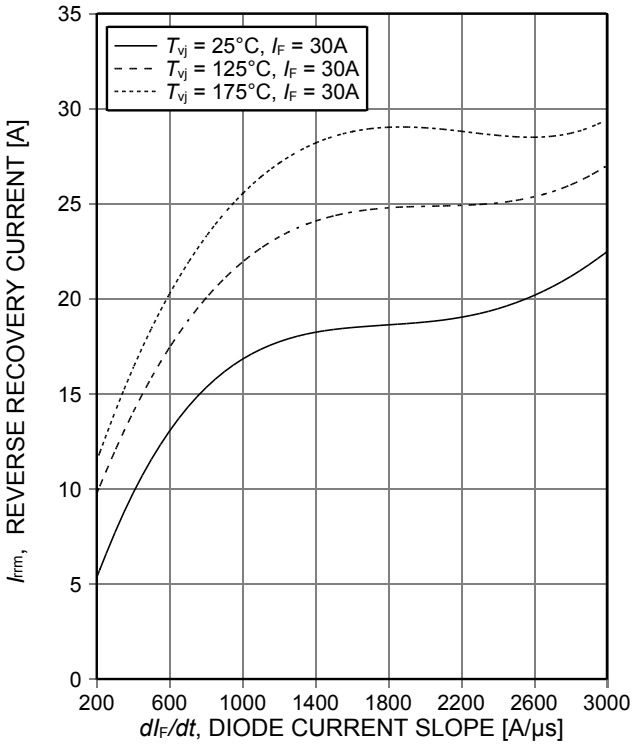

Figure 6. **Typical peak reverse recovery current per leg as a function of diode current slope**
(V_R=400V)

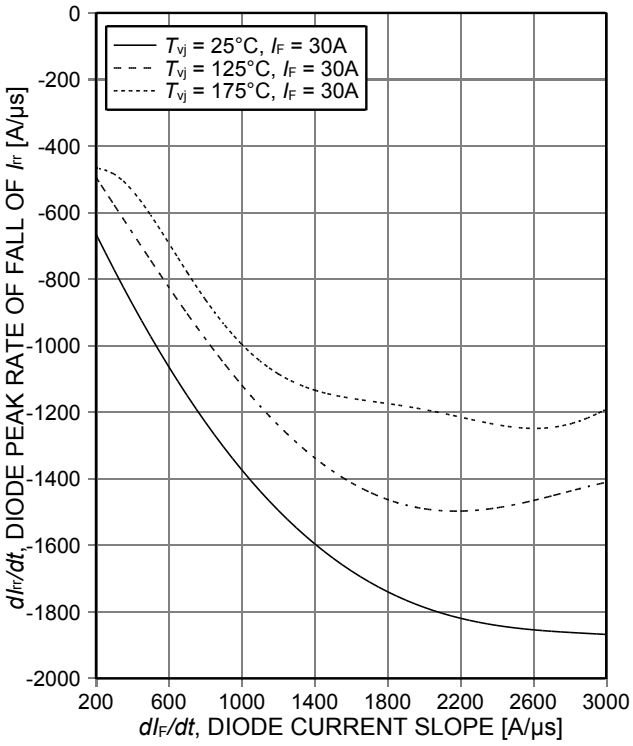

Figure 7. **Typical diode peak rate of fall of rev. rec. current per leg as a function of diode current slope**
(V_R=400V)

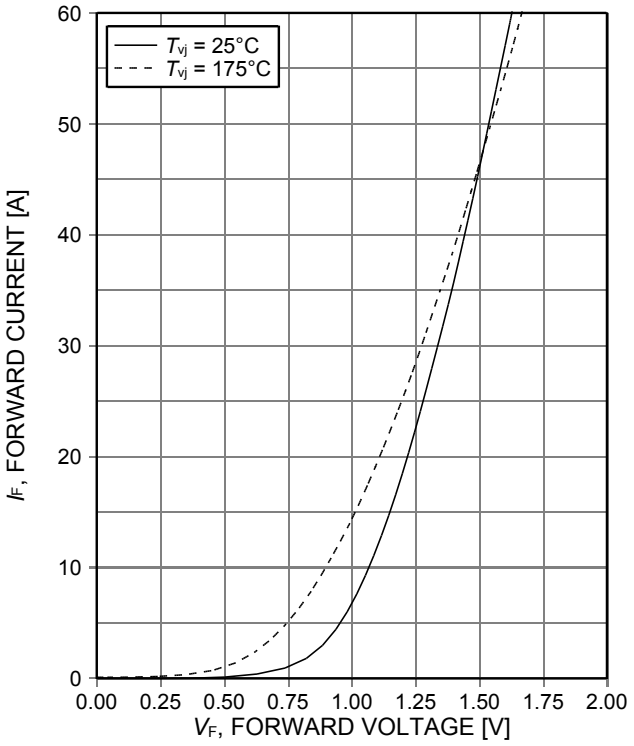

Figure 8. **Typical diode forward current per leg as a function of forward voltage**

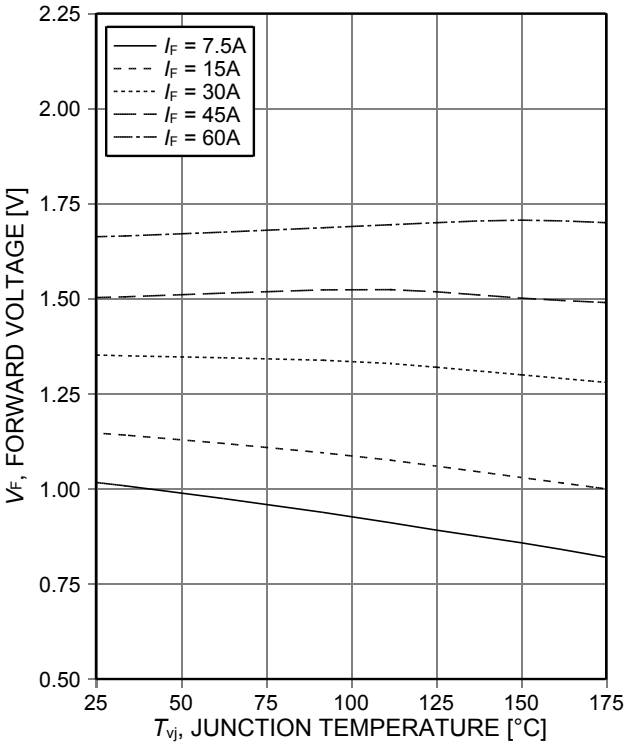

Figure 9. **Typical diode forward voltage per leg as a function of junction temperature**

PG-TO247-3

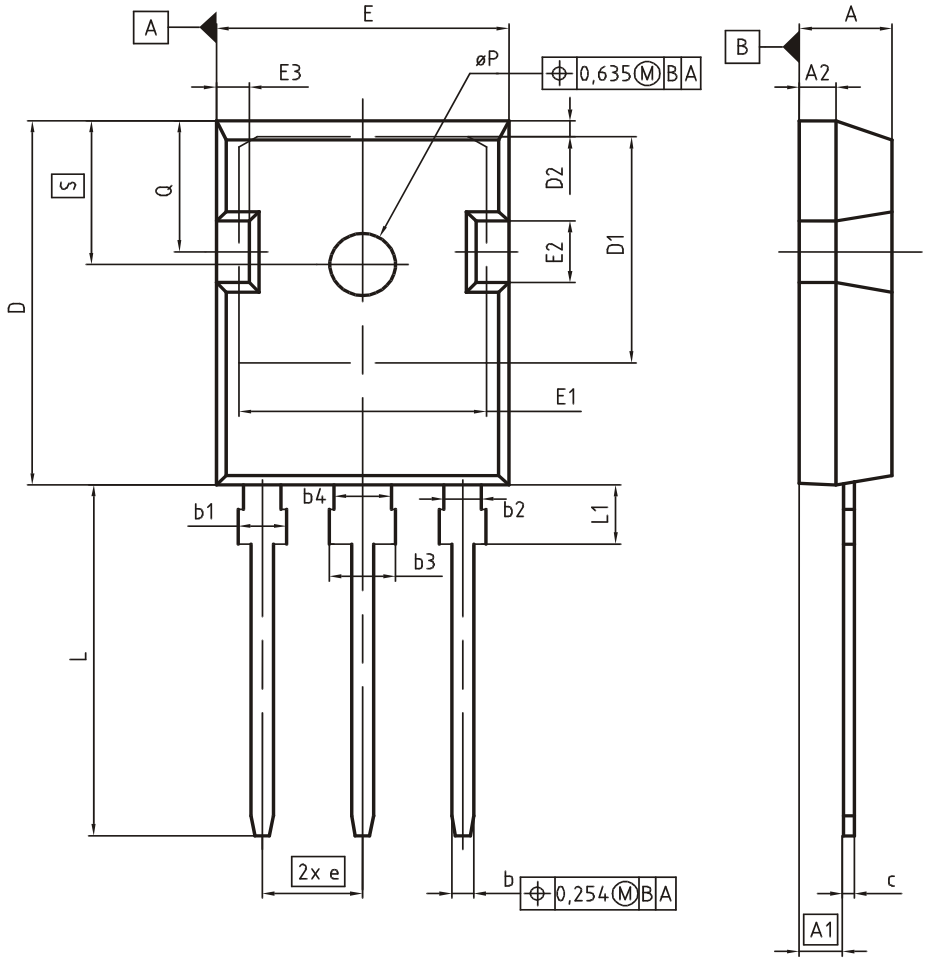

DIM	MILLIMETERS		INCHES	
	MIN	MAX	MIN	MAX
A	4.83	5.21	0.190	0.205
A1	2.27	2.54	0.089	0.100
A2	1.85	2.16	0.073	0.085
b	1.07	1.33	0.042	0.052
b1	1.90	2.41	0.075	0.095
b2	1.90	2.16	0.075	0.085
b3	2.87	3.38	0.113	0.133
b4	2.87	3.13	0.113	0.123
c	0.55	0.68	0.022	0.027
D	20.80	21.10	0.819	0.831
D1	16.25	17.65	0.640	0.695
D2	0.95	1.35	0.037	0.053
E	15.70	16.13	0.618	0.635
E1	13.10	14.15	0.516	0.557
E2	3.68	5.10	0.145	0.201
E3	1.00	2.60	0.039	0.102
e	5.44 (BSC)		0.214 (BSC)	
N	3		3	
L	19.80	20.32	0.780	0.800
L1	4.10	4.47	0.161	0.176
øP	3.50	3.70	0.138	0.146
Q	5.49	6.00	0.216	0.236
S	6.04	6.30	0.238	0.248

DOCUMENT NO.
Z8B00003327

SCALE

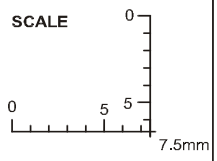

EUROPEAN PROJECTION

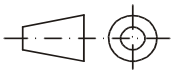

ISSUE DATE
09-07-2010

REVISION
05

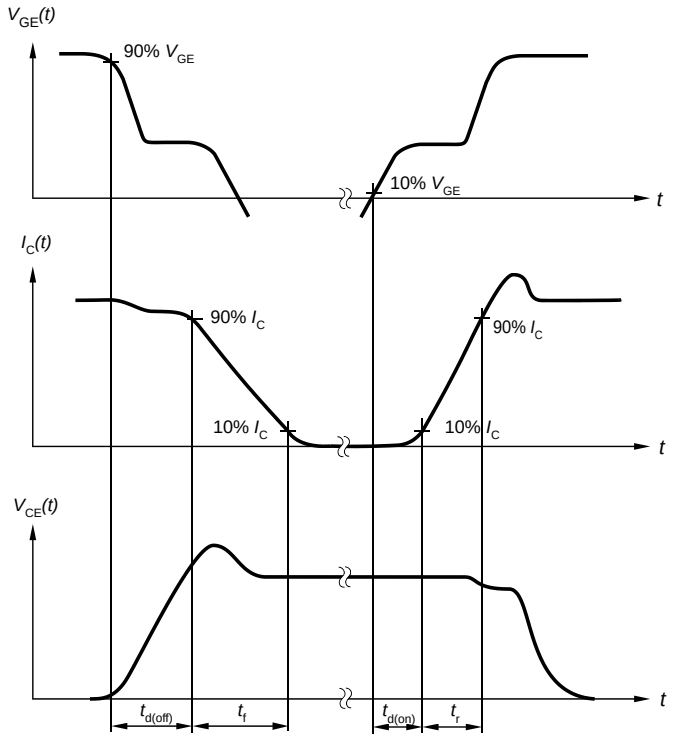

Figure A. **Definition of switching times**

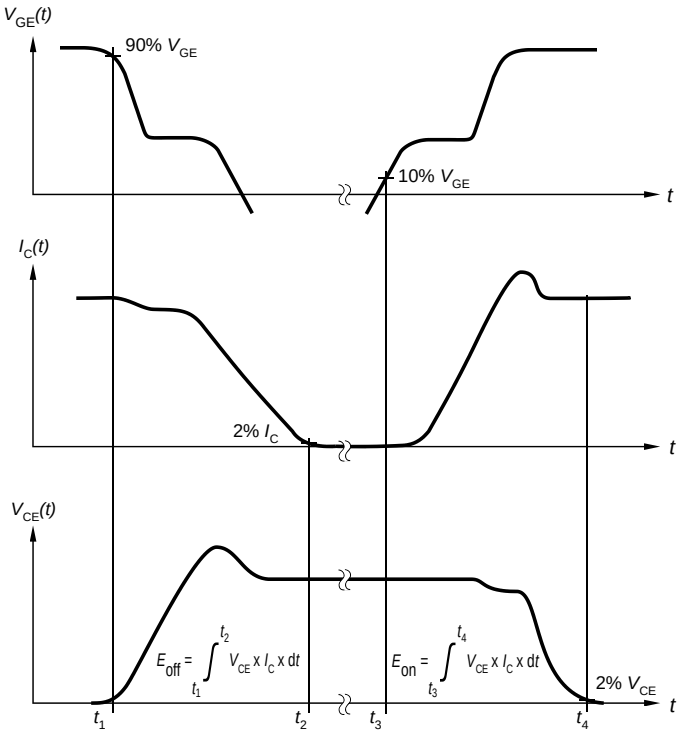

Figure B. **Definition of switching losses**

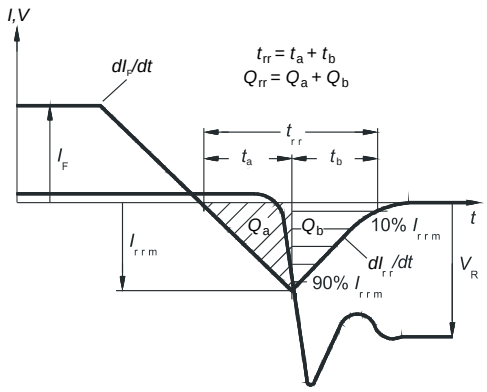

Figure C. **Definition of diode switching characteristics**

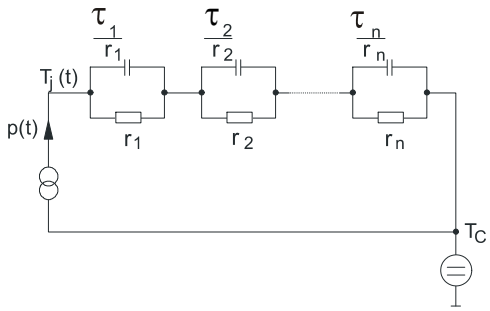

Figure D. **Thermal equivalent circuit**

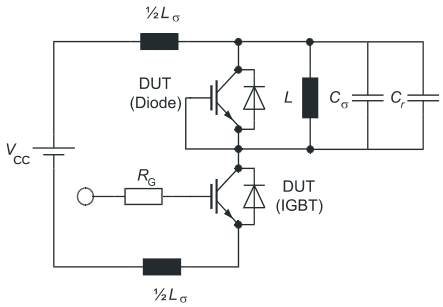

Figure E. **Dynamic test circuit**
Parasitic inductance L_σ,
parasitic capacitor C_σ,
relief capacitor C_r,
(only for ZVT switching)

Revision History

IDW60C65D1

Revision: 2014-12-10, Rev. 2.1

Previous Revision

Revision	Date	Subjects (major changes since last revision)
1.1	2014-12-02	Preliminary data sheet
2.1	2014-12-10	Final data sheet

We Listen to Your Comments
Any information within this document that you feel is wrong, unclear or missing at all?
Your feedback will help us to continuously improve the quality of this document.
Please send your proposal (including a reference to this document) to: erratum@infineon.com

Published by
Infineon Technologies AG
81726 Munich, Germany
81726 München, Germany
© 2014 Infineon Technologies AG
All Rights Reserved.

Legal Disclaimer
The information given in this document shall in no event be regarded as a guarantee of conditions or characteristics. With respect to any examples or hints given herein, any typical values stated herein and/or any information regarding the application of the device, Infineon Technologies hereby disclaims any and all warranties and liabilities of any kind, including without limitation, warranties of non-infringement of intellectual property rights of any third party.

Information
For further information on technology, delivery terms and conditions and prices, please contact the nearest Infineon Technologies Office (www.infineon.com).

Warnings
Due to technical requirements, components may contain dangerous substances. For information on the types in question, please contact the nearest Infineon Technologies Office.
The Infineon Technologies component described in this Data Sheet may be used in life-support devices or systems and/or automotive, aviation and aerospace applications or systems only with the express written approval of Infineon Technologies, if a failure of such components can reasonably be expected to cause the failure of that life-support, automotive, aviation and aerospace device or system or to affect the safety or effectiveness of that device or system. Life support devices or systems are intended to be implanted in the human body or to support and/or maintain and sustain and/or protect human life. If they fail, it is reasonable to assume that the health of the user or other persons may be endangered.